TRINITY FISH PASSAGE AND CULVERT IMPROVEMENT PROJECT

funded by a grant from the

California Department of Fish and Wildlife through the Cannabis Restoration Grant Program (Q2591206)

sponsored by the

SONOMA RESOURCE CONSERVATION DISTRICT

REQUEST FOR COST PROPOSAL

Solicitation Issue Date: November 9th, 2026
Responses Due: December 7th, 2026

Please submit proposals electronically to cnicol@sonomarcd.org
Hard copy proposals will not be accepted

Construction Project Manager
1221 Farmers Lane, Suite F
Santa Rosa, CA 95405
(707) 569-1448

This page is intentionally blank.

TRINITY FISH PASSAGE AND CULVERT IMPROVEMENT PROJECT

TABLE OF CONTENTS

Introduction 1
Scope of Work 1
Location 2
Submission of Cost Proposal 2
Prevailing Wages 2
Environmentally Sensitive Areas 4
Contract Documents 5
Construction References 5
Licenses 5
Bonding 5
Project Timeline 6
Permits 7
Inspections 7
Pre-Contractural Expenses 7
General Conditions 7
Right to Reject Proposals 8
Cost Proposal 9

Exhibits

Exhibit 1: Project Plans and Specifications
Exhibit 2: Permits
Exhibit 3: Grant Award Documents
Exhibit 4: Sample Contract

This page is intentionally blank.

TRINITY FISH PASSAGE AND CULVERT IMPROVEMENT PROJECT

INSTRUCTIONS TO BIDDERS

INTRODUCTION

The construction of this project, **TRINITY FISH PASSAGE AND CULVERT IMPROVEMENT PROJECT**, is being implemented by the Sonoma Resource Conservation District (SRCD) funded by a grant from the California Department of Fish and Wildlife through the Cannabis Restoration Grant Program (Q2591206). The SRCD is a division of state government and is responsible for conservation of soil, water, and related resources on parcels with agricultural conservation easements.

For the purposes of the bid documents, "Project Manager" shall mean Sonoma Resource Conservation District, 1221 Farmers Lane, Suite F, Santa Rosa, CA 95405. "Landowner" shall refer to the landowner on whose property the project is being implemented. "Engineer" shall refer to Adobe Associates, Inc., which designed the project. Project Manager will review and approve all work for payment, provide daily management, and project supervision.

SCOPE OF WORK

The project, hereinafter known as "Project," will implement a stream crossing upgrade for an access road over Trinity Creek, restore unimpeded passage for all life stages of fish, reconnect more than a mile of upstream habitat, and enhance the streambed habitat morphology within a reach of Trinity Creek. Construction work is expected to take six weeks and will involve: (1) excavation and removal of the existing culvert; (2) installation of temporary falsework in preparation for the new culvert; (3) recontouring of the channel bed and banks to better conform with upstream and downstream conditions and improve fish passage; and (4) installation of concrete footings, the new aluminum arch culvert, and associated concrete headwalls and wingwalls (see Exhibit A: Project Plans).

This request for proposal is to supply all labor, equipment, materials, and miscellaneous items necessary to implement the measures as specified and outlined in the plans and specifications attached.

LOCATION

The project is located in Sonoma Creek watershed near Glen Ellen, California. The individual project addresses will be provided prior to the bid walk.

SUBMISSION OF COST PROPOSAL

The submission of a Cost Proposal shall constitute certification by the bidder that they have:

A. Attended the mandatory bid tour to review the site.
B. Developed their own plan takeoffs for determination of materials quantities.
C. Familiarized themselves with all federal, state and local laws, ordinances, rules, and regulations that affect the work.
D. Have examined and understand the bid documents, plans, and specifications.

Bids will only be considered for acceptance if they are accompanied by the following:

- Cost Proposal
    - Estimated Work Timeline
    - Add on Work Rates
    - Subcontractors
    - Certification Statement
    - Check List for Labor Law Requirements

Any bids submitted without these essential components will not be considered for acceptance.

A mandatory bid tour will be scheduled to take place per Schedule on following pages. Please contact Colin Nicol, Water Resources Project Manager, (707) 569-1448, ext. 125 and/or email *cnicol@sonomarcd.org* to RSVP and get location for the tour.

Submit the Request for Cost Proposal (RFCP) package eleven (11) days after bid tour, per the Schedule on following pages.

Deliver RFCP to: *cnicol@sonomarcd.org*

PREVAILING WAGES

This Contract is subject to the requirements of Section 1720 et seq. of the California Labor Code requiring the payment of prevailing wages, the training of apprentices and compliance with other applicable requirements. Contractors and all subcontractors who perform work on the Project are required to comply with these requirements. Prevailing wages apply to all projects over $1,000

which are defined as a "public work" by the State of California. This includes: construction, demolition, repair, alteration, maintenance and even the installation of photovoltaic systems under a Power Purchase Agreement when certain conditions are met under Labor Code Section 1720.6. This includes service and warranty work on public buildings and structures.

The applicable California prevailing wage rate can be found at www.dir.ca.gov and are on file with the SRCD's office, which shall be available to any interested party upon request. The contractor is also required to have a copy of the applicable wage determination posted and/or available at each jobsite.

Specifically, contractors are reminded of the need for compliance with Labor Code Section 1774-1775 (the payment of prevailing wages and documentation of such), Section 1776 (the keeping and submission of accurate certified payrolls) and 1777.5 in the employment of apprentices on public works projects. Further, overtime must be paid for work in excess of 8 hours per day or 40 hours per week pursuant to Labor Code Section 1811-1813.

Special prevailing wage rates generally apply to work performed on weekends, holidays and for certain shift work. Depending on the location of the project and the amount of travel incurred by workers on the project, certain travel and subsistence payments may also be required. Contractors and subcontractors are on notice that information about such special rates, holidays, premium pay, shift work and travel and subsistence requirements can be found at www.dir.ca.gov .

Only bona fide apprentices actively enrolled in a California Division of Apprenticeship Standards approved program may be employed on the project as an apprentice and receive the applicable apprenticeship prevailing wage rates. Apprentices who are not properly supervised and employed in the appropriate ratio shall be paid the full journeyman wages for the classification of work performed.

The public entity for which work is being performed or the California Department of Industrial Relations may impose penalties upon contractors and subcontractors for failure to comply with prevailing wage requirements. These penalties are up to $200 per day per worker for each wage violations identified; $100 per day per worker for failure to provide the required paperwork and documentation requested within a 10-day window; and $25 per day per worker for any overtime violation.

As a condition to receiving progress payments, final payment and payment of retention on any and all projects on which the payment of prevailing wages is required, the contractor agrees to present to SRCD, along with its request for payment, all applicable and necessary certified payrolls (for itself and all applicable subcontractors) for the time period covering such payment request. The term "certified payroll" shall include all required documentation to comply with the mandates set forth in Labor Code Section 1720 et seq, as well as any additional documentation requested by SRCD or its designee including, but not limited to: certified payroll, fringe benefit statements and backup documentation such as monthly benefit statements, employee timecards, copies of wage statements and cancelled checks, proof of training contributions (CAC2 if applicable), and apprenticeship forms such as DAS-140 and DAS-142.

In addition to submitting the certified payrolls and related documentation to SRCD, the contractor and all subcontractors shall be required (for all projects awarded after April 1, 2015) to submit certified payroll and related documents electronically to the California Department of Industrial Relations. Failure to submit payrolls to the DIR when mandated by the project parameters shall also result in the withholding of progress, retention and final payment.

SRCD shall withhold any portion of a payment; including the entire payment amount, until certified payroll forms and related documentation are properly submitted, reviewed and found to be in full compliance. In the event that certified payroll forms do not comply with the requirements of Labor Code Section 1720 et seq., SRCD may continue to hold sufficient funds to cover estimated wages and penalties under the Contract.

All contractors/subcontractors and related construction services subject to prevailing wage, including but not limited to: trucking, surveying and inspection work must be registered with the Department of Industrial Relations as a "public works contractor". Those you fail to register and maintain their status as a public works contractor shall not be permitted to perform work on the project.

ENVIRONMENTALLY SENSITIVE AREAS

This construction site is considered an environmentally sensitive area. The contractor shall take all precautions and measures necessary to protect the environmental integrity of the site including, but not limited to, the protection of all plants, animals, and aquatic life. A dewatering plan is required in the event there is water in the channel during construction. Please reference applicable permits for further information.

The following items are an integral aspect of this construction project, and are to be reviewed before construction begins:

A) Permits are required. Please see permit section below for more information. Permits shall be reviewed by contractor and kept on site at all times.
B) Contractor shall have emergency spill cleanup gear (spill containment and absorption materials) and fire equipment available on site at all times. These items are to be reviewed by the Project Manager before construction begins.
C) Access to the site must be thoroughly reviewed with the Project Manager. Exact location of access way, number of trips planned, and type of vehicles used shall be discussed. Contractor shall be responsible for repairing riparian vegetation and/or private property not highlighted in the disturbance areas at his/her own cost above and beyond the scope of work.

D) Trash, litter, construction debris, cigarette butts, etc., must be stored in a designated area approved by the Project Manager or removed from the site at the end of each working day. Upon completion of work, contractor is responsible for removing all of these unwanted items to the satisfaction of the Project Manager.

CONTRACT DOCUMENTS

Attached to this RFCP package is Exhibit 2: Sample Contract. Bidders are expected to thoroughly examine and understand the contents of each of these documents, which contain pertinent and specific information regarding every aspect of project construction. These contract documents will be included in the final contract made between the successful bidder and the SRCD.

CONSTRUCTION REFERENCES

The latest edition of the Standard Specifications of the State of California, Division of Transportation, shall govern operations and materials (but not pricing) for this project except where otherwise indicated in the specifications and on the plans.

LICENSES

This job requires a California State Contractor's License Class A.

BONDING

If the Contract value is greater or equal to one hundred thousand dollars ($100,000), the CONTRACTOR shall provide a performance bond in favor of the SRCD in the amount of one hundred percent (100%) of the contract price and a labor and materials bond in favor of the SRCD in the amount of one hundred percent (100%) of the contract price.

PROJECT TIMELINE

Date	Item	Notes
November 19th, 2026	Bid Tour	You must RSVP by calling Colin Nicol at (707) 569-1448 x 125 or email cnicol@sonomarcd.org
November 23rd, 2026	Questions Due	All questions regarding the Cost Proposal must be in by 5:00pm. Questions shall be emailed to Colin Nicol at cnicol@sonomarcd.org.
December 2nd, 2026	Questions Answered	All questions shall be answered and sent to all Contractors at bid tour via email by 5:00pm.
December 7th, 2026	Proposals Due	**Cost Proposals and Required Attachments** are due by 5:00pm.
December 15th, 2026	Tentative Contract Executed	Contractor enters into a bona fide contract with SRCD: contract signed, insurance provided, W-9 paperwork submitted and bonds issued.
June 15st, 2027	Construction Start	Construction and inspections may begin.
October 15th, 2027	Construction Completion Deadline	Last day of work allowed by permits.

The SRCD would like to complete construction within 35 working days (defined as Monday-Friday, excluding weekends, holidays and rain days) and within the deadline for completion of work defined in the Timeline above. Contractor shall submit a planned construction schedule to the Project Manager that conforms to the project timeline, which may be adjusted for delays such as inclement weather or saturated soil conditions at the discretion of the SRCD. Contractors will be responsible for communicating project delays and potential problems to the Project Manager immediately. No work shall begin until authorized by the SRCD. A pre-construction meeting will be held with the successful bidder, the landowner, Engineer, and the SRCD agent prior to start of work at each site.

PERMITS

The SRCD has or will obtain the following permits. Copies of permits are provided in Exhibit 2. Permits shall be available at the construction site at all times.

1. California Department of Fish and Wildlife Lake and Streambed Alteration – 1600
2. State Water Resources Control Board Dredge Fill – 401
3. Permit Sonoma Building Permit

INSPECTIONS

Work performed on this project shall be subject to regular inspections by the Engineer and SRCD Project Manager. The Contractor shall not cover up any work prior to these inspections. Inspection shall occur during construction and at job completion. Contact Project Manager for observation points. See the Special Inspections Form in Exhibit A for required inspections.

PRE-CONTRACTUAL EXPENSES

No reimbursement will be made by the RCD for costs incurred in the preparation of the response to this Request for Proposal. Submitted materials will not be returned and become the property of the RCD. The RCD shall not, under any circumstances, be liable for any pre-contractual expenses incurred by Respondents in the preparation of their Proposals. Respondents shall not include any such expenses as part of their Proposals. Pre-contractual expenses are defined as expenses incurred by the Respondent in preparing its Proposal in response to this solicitation, submitting the Proposal to the RCD, negotiating with the RCD on any matter related to the Proposal, and any other expenses incurred by the Respondent prior to the date of award and execution of an Agreement.

GENERAL CONDITIONS

The RCD reserves the right to:

- Reject any or all Proposals as described further below;
- Select the Proposal most advantageous to the RCD;
- Verify all information submitted in the Proposal;
- Withdraw this solicitation at any time without prior notice and furthermore, makes no representation that any Agreement will be awarded to any Respondent responding to this solicitation;
- Award its total requirements to one Respondent or to apportion those requirements among two or more Respondents as the RCD may deem to be in its best interests;
- Negotiate the final Agreement with any Respondent(s) as necessary to serve the best interests of the RCD;
- Amend this solicitation;
- Amend the first Agreement to incorporate necessary attachments and exhibits or to reflect negotiations between the RCD and the successful Respondent.

RIGHT TO REJECT PROPOSALS

Submission of a proposal indicates acceptance by the firm or individual of the conditions contained in this request for proposal unless clearly and specifically noted in the proposal submitted and confirmed in the agreement between the RCD and the firm selected. The RCD reserves the right without prejudice to reject any or all proposals.

COST PROPOSAL

To: Executive Committee, Sonoma Resource Conservation District

From: (Name of Contractor): _____

We, the undersigned, having familiarized ourselves with local conditions affecting the cost of work to be done, along with the cost proposal and contract documents, hereby propose to provide and furnish all labor, materials, utilities, transportation, and equipment of all types and kinds and to complete, ready for use, all work as specified and outlined in the Project Plans and Specifications, and as are described below in this Request for Cost Proposal.

We, the undersigned, agree to perform all of the above work to its completion and to the satisfaction of the SRCD for the rates and prices for said work as indicated below.

We, the undersigned, understand that the contract is a not to exceed lump sum contract. The Contractor cannot be paid over the sum not to exceed without a change order from the Project Manager. The Contractor must bid on all parts of this project. The SRCD will not be responsible for any loss of anticipated profits due to reductions in the size of the contract.

The project involves all of the work indicated on the attached plans and specifications. Please provide cost estimates for the following work:

Trinity Fish Passage and Culvert Improvement Project

Treatment Type	Est. Amt.	Total
Mobilization	Lump Sum	
Site prep and demolition: removal of vegetation and existing culvert	Lump Sum	
Culvert installation and channel recontouring	Lump Sum	
Driveway Restoration (CL II Base Rock)	Lump Sum	
BMPs: Erosion prevention, sediment control measures, tree protection fencing	Lump Sum	
TOTAL BID:		$

Add/Alternate	Est. Amt.	Total
Dewatering: cofferdam, pump, piping	Lump Sum	

Total Bid (excluding Add/Alternates):

$_____

(in words)

Estimated Work Timeline: Attach a sheet to the Cost Proposal that indicates approximately by date when Project milestones are expected to be started and completed. This is for SRCD initial planning purposes only and is not a schedule to which CONTRACTOR will be held.

Add-on work

Proposals for additional work or materials that would increase the cost of the contract must be submitted and approved before the materials are purchased or the work is done. For add-on work, if requested, the following equipment, labor, and materials rates will be used to determine compensation:

A) Materials purchased and delivered to the site: Contractor's purchase cost, as documented by sales receipts, plus ___ percent for contractor handling and profit

B) List all equipment you expect to use on the project and a cost per hour, including the operator.

_____,$_____/hour

_____ ,$_____/hour

_____,$_____/hour

_____,$_____/hour

C) For labor costs per hour, list all classifications of labor or individuals and a rate per hour.

_____ ,$_____/hour

_____,$_____/hour

_____,$_____/hour

Subcontractors

List (if any) subcontractors you are planning to use on this project. Provide company name and California license number and classification.

Name of Subcontractor _____,
License # _____ Classification_____
Name of Subcontractor _____,
License # _____ Classification_____

Certification Statement

I hereby certify that:

1.) all of the statements herein made by me are made on behalf of:

A.) a corporation organized and existing under the laws of the State of California,

governed by:

President _____

Vice-President _____

Secretary _____

Treasurer _____

or B.) a partnership consisting of: _____

and _____;

or C.) an individual trading as:_____
in the County of _____, State of _____

2.) that I have thoroughly examined the plans and specifications, contract documents and all other items bound herein;
3.) that I have carefully prepared this Cost Proposal form and have checked the same in detail before submitting this bid;
4.) that I have full authority to make such statements and to submit this bid on the Company's behalf; and
5.) that the statements herein are true and correct.

Signature _____ Date _____

By _____ Title _____

Calif. Contractor's License No. _____ Classification_____ Expires _____

Name of Qualifier for License _____

Federal Tax Identification No. _____

Company Address _____ Phone _____

Project Representative _____

Representative's Phone No. _____

See checklist of Labor Law Requirements (next page)

Checklist of Labor Law Requirement

Suggested Checklist of Labor Law Requirements to Review at Prejob Conference, Section 16421, with suggested Certification by subcontractor.

The federal and state labor law requirements applicable to the contract are composed of but not limited to the following items:

(1) The contractor's duty to pay prevailing wages under Labor Code Section 1770 et seq., should the project exceed the exemption amounts;

(2) The contractor's duty to employ registered apprentices on the public works project under Labor Code Section 1777.5;

(3) The penalties for failure to pay prevailing wages (for non-exempt projects) and employ apprentices including forfeitures and debarment under Labor Code Sections 1775 and 1777.7;

(4) The requirement to keep and submit copies upon request of certified payroll records under Labor Code Section 1776, and penalties for failure to do so under Labor Code Section 1776(g);

(5) The prohibition against employment discrimination under Labor Code Section 1777.6; the Government Code, and Title VII of the Civil Rights Act of 1964;

(6) The prohibition against accepting or extracting kickback from employee wages under Labor Code Section 1778;

(7) The prohibition against accepting fees for registering any person for public work under Labor Code Section 1779; or for filling work orders on public works under Labor Code Section 1780;

(8) The requirement to list all subcontractors under Public Contracts Code Section 4104;

(9) The requirement to be properly licensed and to require all subcontractors to be properly licensed and the penalty for employing workers while unlicensed under Labor Code Section 1021 and under the California Contractors License Law, found at Business and Professions Code Section 7000 et seq;

(10) The prohibition against unfair competition under Business and Professions Code Sections 17200-17208;

(11) The requirement that the contractor be properly insured for Workers Compensation under Labor Code Section 1861;

(12) The requirement that the contractor abide by the Occupational, Safety and Health laws and regulations that apply to the particular construction project;

(13) The federal prohibition against hiring undocumented workers, and the requirement to secure proof of eligibility/citizenship from all workers.

(14) The requirement to provide itemized wage statements to employees under Labor Code Section 226.

Certification:

I acknowledge that I have been informed and am aware of the foregoing requirements and that I am authorized to make this certification on behalf of _____.

_____ _____

Date Name of person signing and company

Exhibit 1: Project Plans and Specifications

SPARC CULVERT IMPROVEMENT PLAN

101 Trinity Road

Glen Ellen, California

APN 053-100-015

GENERAL NOTES:

1. All materials, workmanship, and construction shall conform to the State of California Standard Specifications and Standard Plans (current edition).
2. For any work to be performed on the County right–of–way, the Contractor shall obtain an encroachment permit from the Sonoma County Department of Permit and Resource Management, 2550 Ventura Avenue, Santa Rosa, before start of work.
3. The Contractor shall notify the Permit and Resource Management Department's construction inspector before starting work. See "Inspections" below for required notifications and approvals. Final inspection may not be requested until the grading inspector receives, reviews and approves both the engineer's final letter and the final geotechnical report. This approval must be obtained prior to scheduling a final inspection.
4. The Contractor shall be responsible for notifying Underground Service Alert (U.S.A.). Call toll–free (800) 227–2600 at least two working days prior to excavation. The Contractor shall uncover existing buried utilities with utility Owner to verify locations and elevation of utilities. Buried utilities include but are not limited to water, sewer, electrical, gas, and telephone. All utilities conflicting with the proposed construction shall be relocated prior to start of construction.
5. The Contractor shall obtain a trench permit from the California Division of Industrial Safety prior to the excavation of any trench over five feet in depth.
6. All underground improvements shall be installed and approved prior to road surfacing.
7. The construction of bridges, retaining walls, and reinforced buttresses require a building permit from the Permit and Resource Management Department.
8. Roadway improvements may require a grading permit from the Permit and Resource Management Department. A grading permit is exempt when NOT required under Chapter 11 and 11A of Sonoma County Code.
9. Restoration of existing surfacing due to construction of trenches shall be governed by the conditions in the road encroachment permit.
10. The County may require additional work or facilities in the course of the construction of project in order for the improvements to reasonably provide for the intended function or for public safety.
11. Any work taking place within running water must first have obtained a Roiling Permit from the Sonoma County Water Agency.

GRADING & DRAINAGE NOTES:

1. Perform grading and drainage improvements in accordance with chapter 11 and 11a of the Sonoma County Code (SCC), applicable Sonoma County regulations.
2. All work shall be done in compliance with the approved plans and specifications. the approved plans and specifications shall not be changed without the written approval of the Sonoma County permit and resource management department (PRMD). proposed modifications to the approved plans and specifications shall be submitted to PRMD in writing, together with all necessary technical information and design details. the contractor shall immediately notify the property owner and engineer of record, if applicable, upon discovering discrepancies, errors, or omissions in the approved plans. prior to proceeding, the property owner shall have the approved plans revised to clarify identified discrepancies, errors, or omissions. PRMD may require unauthorized work to be redone or removed to verify compliance with SCC. PRMD may initiate enforcement action and seek the imposition of civil penalties for violations of SCC.
3. The grading or drainage permit and a copy of the approved plans shall be maintained on the project site throughout the duration of construction activities.
4. PRMD may order that any work stop immediately if it is performed contrary to Chapter 11 and 11a of the SCC, the approved plans and specifications, permit conditions, or any work that has become hazardous to property or the public. a grading or drainage permit may be suspended, revoked, or modified by PRMD in accordance with SCC 11.24.080.
5. Issuance of a grading or drainage permit by PRMD does not eliminate the responsibility of the property owner to secure permits from other agencies with regulatory responsibilities for the uses and construction activities associated with the work shown on the approved plans. failure to obtain all required permits may result in fines from other agencies.
6. Existing drainage courses receiving waters from the project site and located throughout the project site shall remain open and clear of debris to properly convey storm water. If existing drainage courses receiving waters from the project site are located in the county Right–of–Way and need maintenance, contact the department of transportation and public works at (707) 565–2231 for further assistance. In any event, the property owner and/or contractor shall be held liable for any damage due to obstructing natural drainage patterns.
7. The contractor shall contact the underground service alert (USA), at 811, at least two working days, but not more than 14 calendar days, prior to excavation. the contractor shall uncover relevant utilities to verify their location and elevation. if unexpected or conflicting utilities are encountered during excavation, notify usa, the utility owner, and/or the engineer of record, if applicable, immediately. utilities include but are not limited to water, sewer, electrical, gas, telephone, and cable/tv. the excavator shall delineate with paint or other suitable markings the area to be excavated.
8. In the event cultural resources (such as historical, archaeological, and paleontological resources, and human remains) are discovered during grading or other construction activities, work shall immediately be halted within the vicinity of the find. the northwest information center shall be notified at (707) 588–8455. a qualified archeologist shall be consulted for an on–site evaluation. additional mitigation may be required by the county per the archeologist's recommendations and SCC 11.16.050. if human burials or human remains are encountered, the contractor shall also notify the county coroner at (707) 565–5070.
9. Should grading operations encounter hazardous materials, or what appear to be hazardous materials, stop work immediately in the contaminated area and contact 911 or the appropriate agency for further instruction.
10. Retaining walls, unless exempted per SCC 7.13(A)(3)4, are not approved under a grading permit. a separate building permit is required.
11. Equipment shall not cross or disturb channels of actively flowing streams without a PRMD approved rolling permit and best management practices (SCC 23.1 and 11.16.060.D).
12. Grading and drainage improvements shall be set back from lakes, ponds, streams, and wetlands in compliance with the requirements of SCC 11.16.100, 11.16.120, and 11.16.130. existing vegetation shall be retained in stream setback areas to filter soil and other pollutants carried in storm water.
13. Excess soil shall be removed from the project site unless depicted to remain on site per the approved plan. the site receiving soil may require a grading permit unless exempted by SCC 11.04.010.C.
14. Contours, elevations, and shapes of finished surfaces shall be blended with adjacent natural terrain to achieve a consistent grade and natural appearance. borders of cut slopes and fills shall be rounded off to a minimum radius of five feet to blend with the natural terrain.
15. Fill material shall not include organic, frozen, or other deleterious materials. no rock or similar irreducible material greater than six inches in any dimension shall be included in fills except where approved by the soils engineer. Fills shall be constructed in lifts not exceeding eight inches in depth. completed fills shall be stable, well–integrated, and bonded to adjacent materials and the materials on which they rest. fills shall be competent to support anticipated loads and be stable at the design slopes shown on the approved plans and specifications or as directed by the soils engineer.
16. Ground surfaces shall be prepared to receive fill by removing vegetation, topsoil, and other unsuitable materials, and scarifying the ground to provide a bond with the fill material.
17. Fill shall not be placed on natural slopes steeper than 2H:1V (50 percent).
18. Fills intended to support structures or surcharges shall be compacted to a minimum of 90 percent of maximum dry density, as determined by ASTM D 1557, modified proctor. a higher compaction percentage may be required by the soils engineer.
19. Fills not intended to support structures or surcharges shall be compacted as follows:
    (1)Fill greater than three feet in depth shall be compacted to the density specified by the soils engineer.
    (2)Fills no greater than three feet in depth shall be compacted to the density necessary for the intended use or as directed by the soils engineer.

STORM DRAINS

1. Trench and backfill construction shall be in accordance with CalTrans' Standard Plan A62–D for concrete culverts and A62–F for metal and plastic culverts.
2. Off–site drainage improvements shall be completed prior to November 1st.

MISCELLANEOUS

1. Testing for relative densities shall be in accordance with CalTrans' Test Method No. 216 Part II or ASTM 1557. The use of sand cone methods – such as ASTM 1556 or CalTrans 216, Part I, shall not be allowed.
2. Placement of mailboxes must be coordinated with and approved by the local branch of the United States Post Office.

EROSION PREVENTION AND SEDIMENT CONTROL NOTES:

1. Perform erosion prevention and sediment control in accordance with Chapter 11 and 11a of the Sonoma County Code (SCC).
2. The approved plans shall conform to the Permit and Resource Management Department's (PRMD) erosion prevention and sediment control best management practices (BMP's) guide as posted on the PRMD website.
3. The property owner is responsible for preventing storm water pollution generated from the construction site year round. Work sites with inadequate erosion prevention and/or sediment control may be subject to a stop work order and/or additional inspection fees to verify compliance with SCC.
4. If discrepancies occur between these notes, material referenced on the approved plans or manufacturer's recommendations, then the most protective shall apply.
5. At all times the property owner is responsible for obtaining and complying with the State of California National Pollutant Discharge Elimination System (NPDES) general permit for storm water discharges associated with construction and land disturbing activities such as clearing, grading, excavation, stockpiling, and reconstruction of existing facilities involving removal and replacement.
6. The property owner must implement an effective combination of erosion prevention and sediment control on all disturbed areas during the rainy season (October 1 – April 30). Grading and drainage improvement shall be permitted during the rainy season only when on–site soil conditions permit the work to be performed in compliance with SCC.
7. During the rainy season, storm water BMP's referenced or detailed in PRMD's BMP guide shall be implemented and functional on the site at all times and the area of erodible land exposed at any one time during the work shall not exceed one acre or 20 percent of the permitted work area, whichever is greater, and the time of exposure shall be minimized to the maximum extent practicable.
8. During the non–rainy season, on any day when the National Weather Service forecast is a chance of rain of 30 percent or greater within the next 24 hours, storm water BMP's referenced or detailed in PRMD's BMP guide shall be implemented and functional on the site to prevent soil and other pollutant discharges. At all other times, BMP's should be stored on site in preparation for installation prior to rain events.
9. Erosion prevention and sediment control BMP's shall be inspected by the property owner before forecasted storm events and after storm events to ensure BMP's are functioning properly. Erosion prevention and sediment control BMP's that have failed or are no longer effective shall be promptly replaced. Erosion prevention and sediment control BMP's shall be maintained until disturbed areas are stabilized.
10. The limits of grading shall be defined and marked on site to prevent damage to surrounding trees and other vegetation. Preservation of existing vegetation shall occur to the maximum extent practicable. Any existing vegetation within the limits of grading that is to remain undisturbed by the work shall be identified and protected from damage by marking, fencing, or other measures.
11. Changes to the Erosion Prevention and Sediment Control Plan may be made to respond to field conditions if the alternative BMP's are equivalent or more protective than the BMP's shown on the approved plans. Alternative BMP's are subject to review and approval by PRMD staff.
12. Discharges of potential pollutants from construction sites shall be prevented using source controls to the maximum extent practicable. Potential pollutants include but are not limited to: sediment, trash, nutrients, pathogens, petroleum hydrocarbons, metals, concrete, cement, asphalt, lime, paint, stains, glues, wood products, pesticides, herbicides, chemicals, hazardous waste, sanitary waste, vehicle or equipment wash water, and chlorinated water.
13. Entrance(s) to the construction site shall be maintained in a condition that will prevent tracking or flowing of potential pollutants offsite. Potential pollutants deposited on paved areas within the County Right–of–Way, such as roadways and sidewalks, shall be properly disposed of at the end of each working day or more frequently as necessary. The contractor shall be responsible for cleaning construction vehicles leaving the site on a daily basis to prevent dust, silt, and dirt from being released or tracked offsite. All sediment deposited on paved roadways shall be removed at the end of each working day or more often, as necessary.
14. All disturbed areas shall be protected by using erosion prevention BMP's to the maximum extent practicable, such as establishing vegetation coverage, hydroseeding, straw mulch, geotextiles, plastic covers, blankets, or mats. Temporary revegetation shall be installed as soon as practical after vegetation removal, but in all cases prior to October 1. Permanent revegetation or landscaping shall be installed prior to final inspection.
15. Whenever it is not possible to use erosion prevention BMP's on exposed slopes, sediment control BMP's such as fiber rolls and silt fences shall be installed to prevent sediment migration. Fiber rolls and silt fences shall be trenched and keyed into the soil and installed on contour. Silt fences shall be installed approximately 2 to 5 feet from toe of slope.
16. Hydroseeding shall be conducted in a three step process. First, evenly apply seed mix and fertilizer to the exposed slope. Second, evenly apply mulch over the seed and fertilizer. Third, stabilize the mulch in place. An equivalent single step process, with seed, fertilizer, water, and bonded fibers is acceptable.

    Applications shall be broadcasted mechanically or manually at the rates specified below. Seed mix and fertilizer shall be worked into the soil by rolling or tamping. If straw is used as mulch, straw shall be derived from wheat, rice, or barley and be approximately six to eight inches in length. Stabilization of mulch shall be done hydraulically by applying an emulsion or mechanically by crimping or punching the mulch into the soil. Equivalent methods and materials may be used only if they adequately promote vegetation growth and protect exposed slopes.

Materials

Seed mix
Bromus mollis (blando brome) at 40 lbs/acre, trifolium hirtum (hykon rose clover) at 20 lbs/acre
Fertilizer
16–20–0 & 15% sulphur at 500 lbs/acre
Mulch
straw at 4000 lbs/acre
Hydraulic stabilizing*
m–binder or sentinel 75–100 lbs/acre
Equivalent material per manufacturer

*Non–asphaltic, derived from plants

17. Dust control shall be provided by contractor during all phases of construction.
18. Storm drain inlets shall be protected from potential pollutants until drainage conveyance systems are functional and construction is complete.
19. Energy dissipaters shall be installed at storm drain outlets which may convey erosive storm water flow.
20. Soil, material stockpiles, and fertilizing material shall be properly protected with plastic covers or equivalent BMP's to minimize sediment and pollutant transport from the construction site.
21. Solid waste, such as trash, discarded building materials and debris, shall be placed in designated collection areas or containers. The construction site shall be cleared of solid waste daily or as necessary. Regular removal and proper disposal shall be coordinated by the contractor.
22. A concrete washout area shall be designated to clean concrete trucks and tools. At no time shall concrete products and waste be allowed to enter county waterways such as creeks or storm drains. No washout of concrete, mortar mixers, or trucks shall be allowed on soil. Concrete waste shall be properly disposed.
23. Proper application, cleaning, and storage of potentially hazardous materials, such as paints and chemicals, shall be conducted to prevent the discharge of pollutants.
24. Temporary restrooms and sanitary facilities shall be located and maintained during construction activities to prevent the discharge of pollutants.
25. Appropriate vehicle storage, fueling, maintenance, and cleaning areas shall be designated and maintained to prevent discharge of pollutants.

OWNER INFO:

GORDENKER TURKEY FARMS INC.
SYLVIA BERNARD
PO BOX 341, GLEN ELLEN, CA 95442
PHONE: (415)486–0036

PURPOSE STATEMENT:

THIS PROJECT PROPOSES THE UPGRADE OF AN EXISTING 72" CMP CULVERT TO A NEW OPEN–BOTTOM ALUMINUM ARCH CULVERT ON APN: 053–100–015

PROJECT BENCHMARK

SET REBAR & CAP, ADOBE ASSOCIATES, INC. CONTROL POINT #4, AS SHOWN HEREON. ELEVATION = 386.26' THIS ELEVATION IS ON AN ASSUMED DATUM.

CIVIL ENGINEER/ SURVEY:

ADOBE ASSOCIATES INC
c/o: TIM SCHRAM
1220 NORTH DUTTON AVENUE
SANTA ROSA, CA 95401
PHONE: (707) 541–2300

STRUCTURAL ENGINEER:

MKM & ASSOCIATES
c/o: JOHN COOK
5880 COMMERCE BLVD.
SUITE 105
ROHNERT PARK, CA 94928
PHONE: (707) 578–8185

ABBREVIATIONS

AAI	ADOBE ASSOCIATES, INC.
AB	AGGREGATE BASE
AC	ASPHALT CONCRETE
AD	AREA DRAIN
BLDG	BUILDING
BM	BENCH MARK
CB	CATCH BASIN
CL	CLASS
CO	CLEANOUT
CONC	CONCRETE
DI	DROP INLET
DWG	DRAWING
DWY	DRIVEWAY
EG	EXISTING GROUND
EP	EDGE OF PAVEMENT
EL	ELEVATION
EX	EXISTING
FL	FLOWLINE
FG	FINISH GRADE
FH	FIRE HYDRANT
FS	FINISHED SURFACE
FSS	FIRE SAFE STANDARD
GB	GRADE BREAK
GR	GRATE
IG	INVERT GRADE
LF	LINEAR FEET
MIN	MINIMUM
MAX	MAXIMUM
ME	MATCH EXISTING
MH	MANHOLE
MIN	MINIMUM
NTS	NOT TO SCALE
NO	NUMBER
PL	PROPERTY LINE
PP	POWER POLE
PSI	POUNDS PER SQUARE INCH
RCE	REGISTERED CIVIL ENGINEER
RPBP	REDUCED PRESSURE BACKFLOW PREVENTOR
S	SLOPE
SAD	SEE ARCHITECTURAL DRAWINGS
SLD	SEE LANDSCAPE DRAWINGS
SSD	SEE STRUCTURAL DRAWINGS
SD	STORM DRAIN
SF	SQUARE FEET
SS	SANITARY SEWER
STA	STATION
STD	STANDARD
TC	TOP OF CURB
TYP	TYPICAL
VIF	VERIFY IN FIELD
W	WATER
WM	WATER METER
WV	WATER VALVE

LEGEND

PROPOSED	EXISTING	DESCRIPTION
		PROPERTY BOUNDARY
		CURB & GUTTER
		SANITARY SEWER & MANHOLE
		SANITARY SEWER & CLEANOUT
		STORM DRAIN & DRAINAGE INLET (DI)
		STORM DRAIN & AREA DRAIN (AD)
		ROOF DRAIN & DOWN SPOUT (DS)
		WATER SERVICE / WM WATER SERVICE / RPBP
		WATER MAIN & GATE VALVE
		WHARF HYDRANT
X CX.X		DETAIL X ON SHEET CX.X
		DRAINAGE SWALE

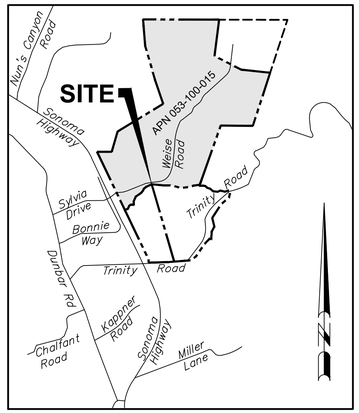

LOCATION MAP

NTS

THESE ATTACHMENTS ARE PART OF THE APPROVED PLANS

- ☐ Plan Checklist
- ☐ Energy Conservation Forms
- ☒ Engineering Details/Calculations
- ☒ Soils Report & Review Letter
- ☐ Fire Marshall Requirements
- ☒ Special Inspection Form
- ☐ Cal Green Checklist
- ☒ INSTALLATION GUIDE
- ☐ _____

SEE ATTACHMENTS ⇩ WITHIN THIS PDF

SOILS ENGINEER IS TO REVIEW FOUNDATION EXCAVATIONS AND NOTIFY CONSTRUCTION INSPECTOR OF APPROVAL PRIOR TO CALLING FOR FOUNDATION INSPECTION

SHEET INDEX

–CIVIL–
C1.0 TITLE SHEET
C2.0 OVERALL SITE PLAN
C3.0 CULVERT PLAN & PROFILE
C4.0 DETAILS
C5.0 EROSION & SEDIMENT CONTROL PLAN
–STRUCTURAL–
SN1 STRUCTURAL NOTES
S1 CULVERT PLAN
SD1 STRUCTURAL DETAILS
1–59 STRUCTURAL CALCULATIONS

GRADING QUANTITIES:

Site Grading is based upon subgrade to existing grade. No account has been taken for strippings, expansion or contraction. Volumes should be verified and determined independently by the contractor.

CUT	FILL	TOTAL
8 CY	22 CY	14 CY <FILL>

Note:
Excess material to be off–hauled to an approved location or placed onsite under the direction of the project Soils Engineer. Earth materials placed onsite not shown on these plans may require revisions(s) to the grading permit.

Area of Disturbance = 0.06 Acres (2,438 SF)

★APPROVED★
— AS NOTED —

PERMIT NO.	APPROVED BY
BLD23-5070	DCHOW

PERMIT AND RESOURCE MANAGEMENT DEPARTMENT

APPROVED JOB COPY OF PLANS TO BE PRINTED IN COLOR AND BE ON THE JOB SITE

BUILDER SHALL NOT DEVIATE FROM THE APPROVED PLANS. REQUESTS FOR CHANGES SHALL BE MADE IN WRITING TO THE PERMIT AND RESOURCE MANAGEMENT DEPARTMENT. CHANGES MADE WITHOUT PRIOR APPROVAL SHALL BE SUBJECT TO REJECTION OF THE WORK.

APPROVAL OF THESE PLANS IS SUBJECT TO, AND DOES NOT AUTHORIZE DEVIATION FROM COMPLETE COMPLIANCE WITH CODE REQUIREMENTS, SPECIAL INSPECTION WHEN REQUIRED, AND FIELD INSPECTION.

PLEASE READ ALL PERTINENT SECTIONS OF APPLICABLE CODES.

No.	Date	Revisions Description	Approved

adobe associates, inc.
civil engineering | land surveying | wastewater
1220 N. Dutton Ave., Santa Rosa, CA 95401
P. (707) 541-2300 F. (707) 541-2301
Website: www.adobeinc.com
"A Service You Can Count On!"

Timothy L. Schram, RCE 67890
My license expires 6/30/2025

PROFESSIONAL ENGINEER * TIMOTHY LEE SCHRAM * No. 067890 * Exp. 6/30/2025 * CIVIL * REGISTERED * STATE OF CALIFORNIA

SPARC CULVERT IMPROVEMENT PLAN

TITLE
101 Trinity Road
Glen Ellen, California
APN 053–100–015

SCALE: AS SHOWN
Date: July 11th, 2023
Design by: DL
Drawn by: DL
Checked by: CM

Sheet
C1.0
1 of 5 Sheets
Job 19268

T:\2019 PROJECTS\19268\dwg\Adobe–Design\Bridge–Culvert\19268–C1.0 Title Sheet.dwg, Doron Lewis, 1/9/2024 12:05:14 PM

BUILDING PLAN CHECK
★ APPROVED ★
January 18, 2024
DCHOW BLD23-5070
PERMIT AND RESOURCE MANAGEMENT DEPARTMENT

S 25°31'34" E 1324.07'
S 89°52'14" W 500.59'
N 16°10'54" E 435.18'
N 58°36'44" E 1099.66'
N 18°45'11" W 534.86'
S 4°46'52" E 428.84'
N 89°52'10" W 1376.09'
N 7°42'31" E 755.33'
N 62°50'18" W 617.84'
N 19°25'01" E 1321.49'
N 89°27'33" W 661.43'
N 83°50'56" W 601.97'
S 17°59'57" W 1101.54'

PROPERTY LINE (TYP)

APN 053-100-004
APN 053-040-008
APN 053-130-009
APN 053-110-016
APN 053-110-001
APN 053-110-076
APN 053-100-014
APN 053-080-011
APN 053-080-004
APN 053-040-009
APN 053-040-039

SONOMA HIGHWAY
PATTEN CREEK
TRINITY ROAD
TRINITY CREEK

Subject Parcel
APN 053-100-015

Ex Building
Ex Parking
Ex Driveway
Ex Well
Ex Turnaround per fss
Ex Septic Field
50' Riparian Setback
Ex Bioretention
Ex Greenhouse
Ex Barn
STOCKPILE / STAGING AREA
10' SS Easement per DN: 2023-047659
APPRX. LIMIT OF DISTURBANCE
BENCHMARK: SET REBAR & CAP (AAI) CONTROL POINT 4 ELEV: 368.26
20' Easement per DN: 2019-021688
PROPOSED 36 LF OPEN-BOTTOM ALUMINUM ARCH CULVERT (CONTECH)
40' PRIVATE ACCESS & PUBLIC UTILITY EASEMENT PER DN:2019073328 STRIP 1
Ex TOP
Ex FL
Ex FSS Turnout
Ex Fence
Existing FSS Turnout
50' PRIVATE ACCESS & PUBLIC UTILITY EASEMENT PER DN:2019073328 STRIP 2
12.5' Existing Access Driveway
ACCESS TO SITE FROM TRINITY ROAD

OVERALL SITE PLAN

200' 100' 0 100' 200' 400' 600'
Graphic Scale: 1" = 200'

D:\2019 PROJECTS\19268\dwg\Adobe-Design\Bridge-Culvert\19268-C2.0 Overall Site Plan.dwg, Doran Lewis, 1/5/2024 12:03:57 PM

Revisions			
No.	Date	Description	Approved

adobe associates, inc.
civil engineering | land surveying | wastewater
1220 N. Dutton Ave., Santa Rosa, CA 95401
P. (707) 541-2300 F. (707) 541-2301
Website: www.adobeinc.com
"A Service You Can Count On!"

Timothy L. Schram, RCE 67890
My license expires 6/30/2025

REGISTERED PROFESSIONAL ENGINEER * TIMOTHY LEE SCHRAM * No. 067890 * Exp. 6/30/2025 * STATE OF CALIFORNIA * CIVIL

SPARC CULVERT IMPROVEMENT PLAN

OVERALL SITE PLAN

101 Trinity Road
Glen Ellen, California
APN 053-100-015

SCALE: AS SHOWN
Date: July 11th, 2023
Design by: DL
Drawn by: DL
Checked by: CM

Sheet
C2.0
2 of 5 Sheets
Job 19268

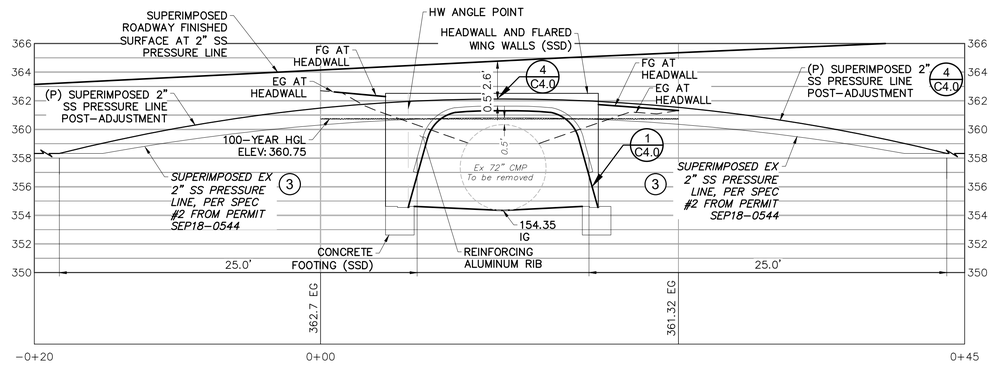

(B) CULVERT INLET PROFILE

5' 2.5' 0 2.5' 5' 10' 15'

Graphic Scale: 1" = 5' H/V

*SUPERIMPOSED LINEWORK DERIVED FROM SEPTIC PERMIT SEP18-0544

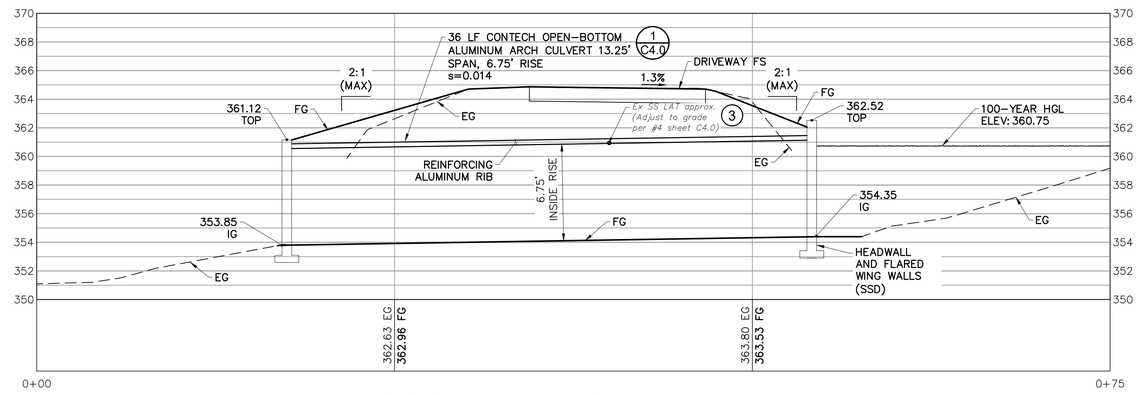

(A) CULVERT PROFILE

5' 2.5' 0 2.5' 5' 10' 15'

Graphic Scale: 1" = 5'

LEGEND:

FINISHED GRADE

EXISTING GRADE

KEY NOTES:

1. MAINTAIN EXISTING GRADES, RESTORE LANDSCAPE TO ITS PRE-CONSTRUCTION FORM.
2. REFER TO STRUCTURAL DRAWINGS FOR HEADWALL AND FLARED WING WALL SCHEMATICS.
3. EXISTING 2" SS PRESSURE LINE GRADE SHALL BE ADJUSTED PER DETAIL 4 ON SHEET C4.0

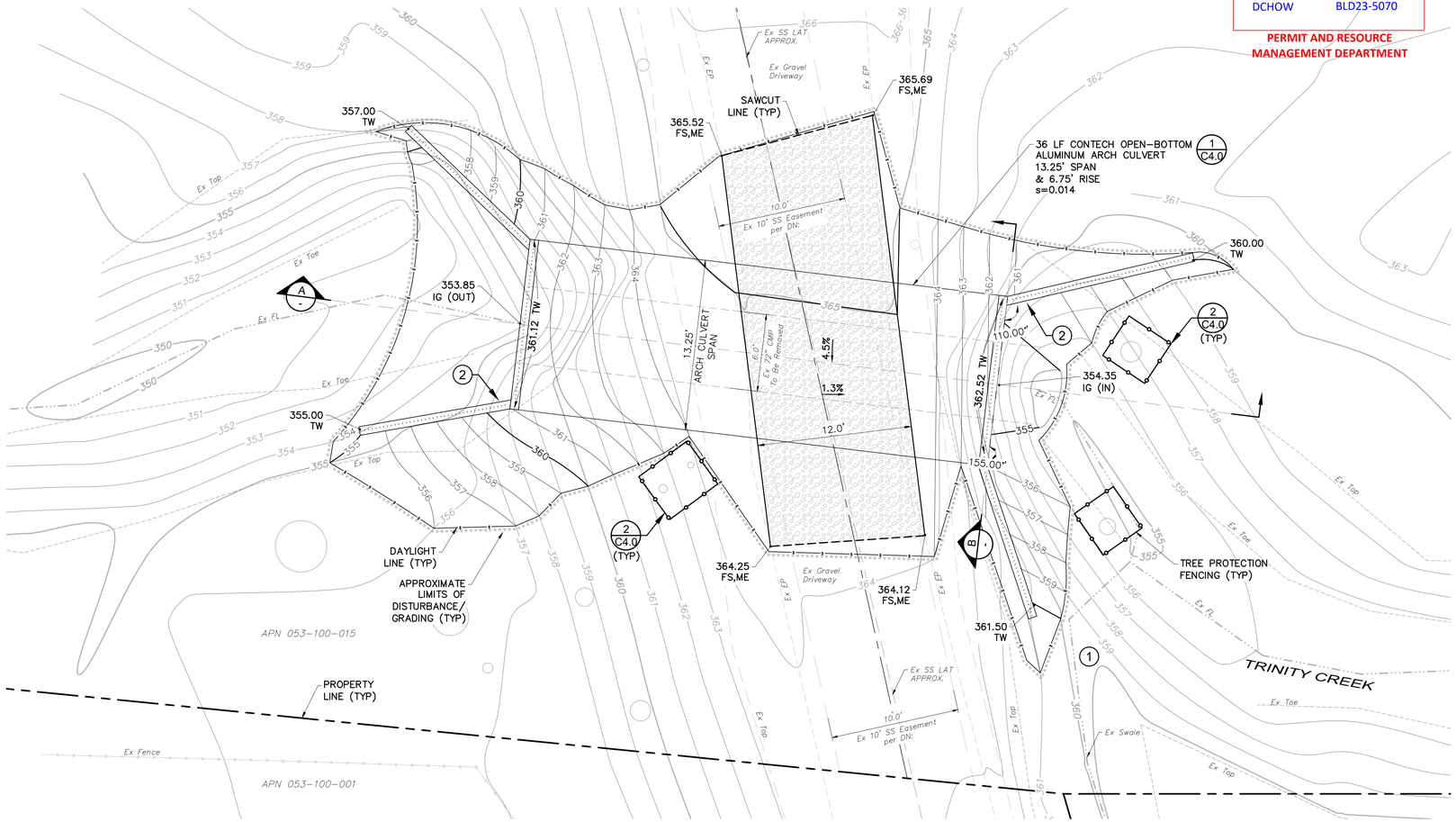

HATCHING LEGEND:

12" CL II AB

CULVERT PLAN

5' 2.5' 0 2.5' 5' 10' 15'

Graphic Scale: 1" = 5'

BUILDING PLAN CHECK
APPROVED
January 18, 2024
DCHOW BLD23-5070
PERMIT AND RESOURCE MANAGEMENT DEPARTMENT

No.	Date	Description	Approved

Revisions

adobe associates, inc.
civil engineering | land surveying | wastewater
1220 N. Dutton Ave., Santa Rosa, CA 95401
P. (707) 541-2300 F. (707) 541-2301
Website: www.adobeinc.com
"A Service You Can Count On!"

Timothy L. Schram, RCE 67890
My license expires 6/30/2025

REGISTERED PROFESSIONAL ENGINEER * TIMOTHY LEE SCHRAM * No. C67890 Exp. 6/30/2025 * STATE OF CALIFORNIA * CIVIL

SPARC CULVERT IMPROVEMENT PLAN

CULVERT PLAN & PROFILE

101 Trinity Road
Glen Ellen, California
APN 053-100-015

SCALE: AS SHOWN
Date: December 28, 2023
Design by: DL
Drawn by: DL
Checked by: CM

Sheet
C3.0
3 of 5 Sheets
Job 19268

T:\2019 PROJECTS\19268\dwg\Adobe-Design\Bridge-Culvert\19268- Grading Plan.dwg, Doron Lewis, 12/18/2023 3:33:08 PM

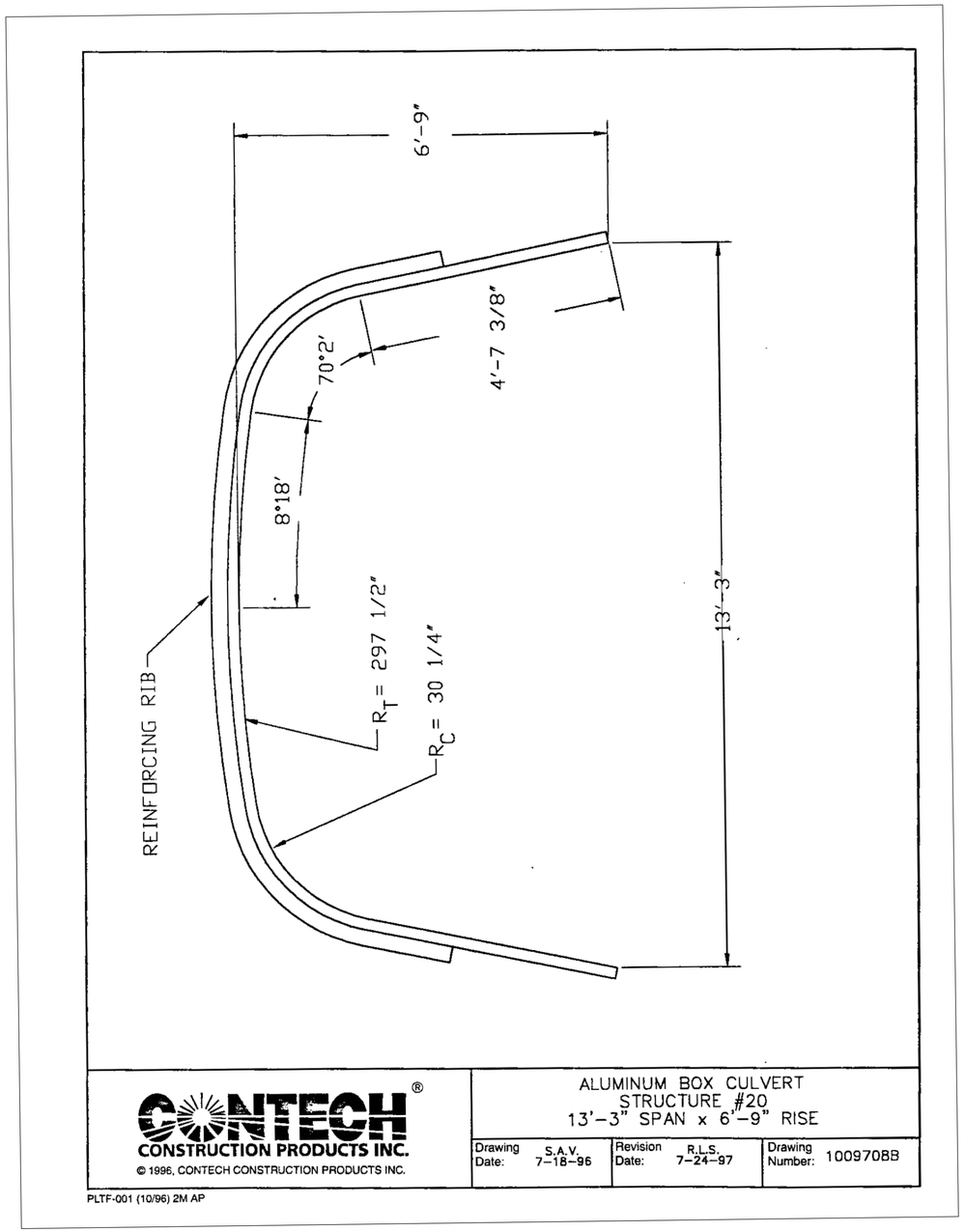

36 LF CONTECH OPEN-BOTTOM ALUMINUM ARCH CULVERT

1

NTS

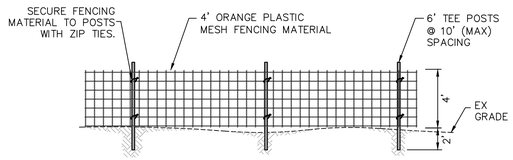

TREE PROTECTION FENCING

2

NTS

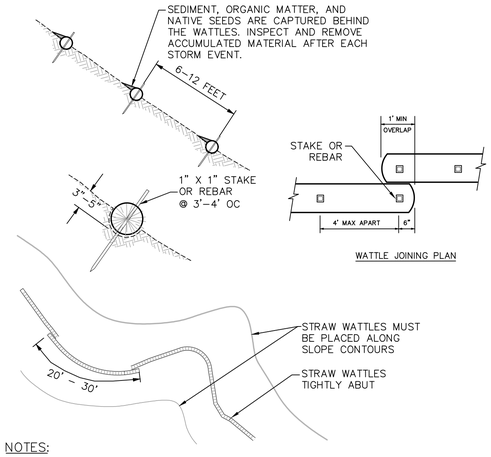

NOTES:

1. STRAW WATTLES ARE TUBES MADE FROM STRAW AND BOUND W/ BIO-DEGRADABLE WRAPPED NETTING. THEY ARE APPROXIMATELY 8" DIA AND 20 – 30 FT LONG.
2. STRAW WATTLES TRAP SEDIMENT AND REDUCE SHEET & RILL EROSION BY REDUCING SLOPE GRADIENT, INCREASING INFILTRATION RATES AND BY PRODUCING A FAVORABLE ENVIRONMENT FOR PLANT ESTABLISHMENT.
3. STRAW WATTLE INSTALLATION REQUIRES THE PLACEMENT AND SECURE STAKING OF THE WATTLE IN A TRENCH, 3" – 5" DEEP, DUG ON CONTOUR. RUNOFF MUST NOT BE ALLOWED TO RUN UNDER OR AROUND WATTLE.

STRAW WATTLES
(CONSTRUCTION SPECIFICATIONS)

PREPARE SLOPE BEFORE THE WATTLING PROCEDURE IS STARTED. SHALLOW GULLIES SHOULD BE SMOOTHED AS WORK PROGRESSES.

DIG SMALL TRENCHES ACROSS SLOPE ON CONTOUR, TO PLACE WATTLES IN. THE TRENCH SHOULD BE DEEP ENOUGH TO ACCOMMODATE HALF THE THICKNESS OF THE WATTLE. WHEN THE SOIL IS LOOSE AND UNCOMPACTED, THE TRENCH SHOULD BE DEEP ENOUGH TO BURY THE WATTLE 2/3 OF ITS THICKNESS BECAUSE THE GROUND WILL SETTLE. IT IS CRITICAL THAT WATTLES ARE INSTALLED PERPENDICULAR TO WATER MOVEMENT, PARALLEL TO THE SLOPE CONTOUR.

START BUILDING TRENCHES AND INSTALL WATTLES FROM THE BOTTOM OF THE SLOPE AND WORK UP.

CONSTRUCT TRENCHES AT CONTOUR INTERVALS OF THREE TO EIGHT FEET APART DEPENDING ON STEEPNESS OF SLOPE. THE STEEPER THE SLOPE, THE CLOSER TOGETHER THE TRENCHES.

LAY THE WATTLE ALONG THE TRENCHES FITTING IT SNUGLY AGAINST THE SOIL. MAKE SURE NO GAPS EXIST BETWEEN THE SOIL AND THE STRAW WATTLE.

USE A STRAIGHT BAR TO DRIVE HOLES THROUGH THE WATTLE AND INTO THE SOIL FOR THE WOODEN STAKES.

DRIVE THE STAKE THROUGH THE PREPARED HOLE INTO THE SOIL. LEAVE ONLY ONE OR TWO INCHES OF STAKE EXPOSED ABOVE WATTLE.

INSTALL STAKES AT LEAST EVERY FOUR FEET APART THROUGH WATTLE. ADDITIONAL STAKES MAY BE DRIVEN ON THE DOWNSLOPE SIDE OF THE TRENCHES ON HIGHLY EROSIVE OR VERY STEEP SLOPES.

STRAW WATTLE

3

NTS

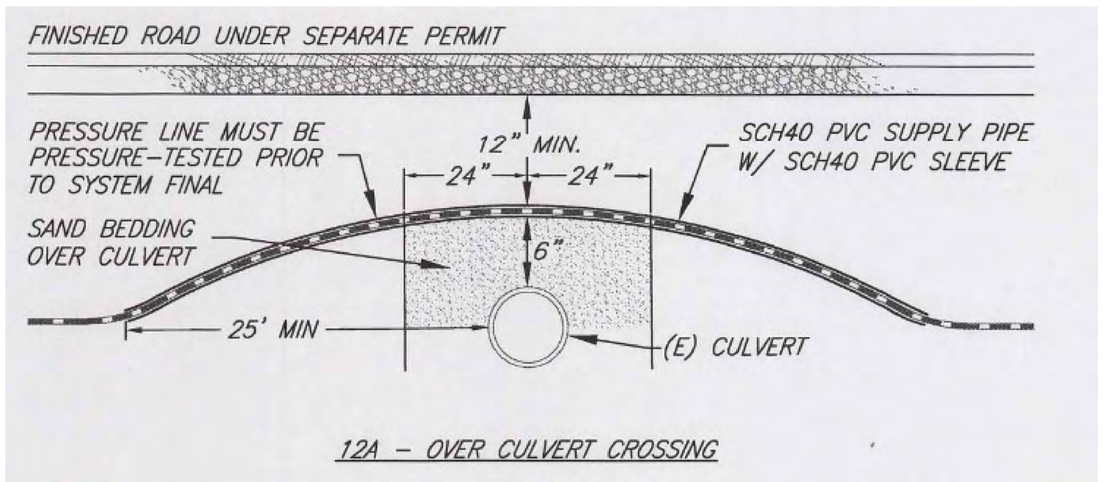

CULVERT PRESSURE LINE CROSSING

4

DETAIL EXTRACTED FROM PERMIT # SEP18-0544, PROVIDED BY 'HOGAN LAND SERVICES'
NTS

BUILDING PLAN CHECK
APPROVED
January 18, 2024
DCHOW BLD23-5070
PERMIT AND RESOURCE MANAGEMENT DEPARTMENT

No.	Date	Revisions	Approved

adobe associates, inc.
civil engineering | land surveying | wastewater
1220 N. Dutton Ave., Santa Rosa, CA 95401
P. (707) 541-2300 F. (707) 541-2301
Website: www.adobeinc.com
"A Service You Can Count On!"

Timothy L. Schram, RCE 67890
My license expires 6/30/2025

REGISTERED PROFESSIONAL ENGINEER * TIMOTHY LEE SCHRAM * No. C67890 Exp. 6/30/2025 * CIVIL * STATE OF CALIFORNIA

SPARC CULVERT IMPROVEMENT PLAN

DETAILS

101 Trinity Road
Glen Ellen, California
APN 053-100-015

SCALE: AS SHOWN
Date: December 28, 2023
Design by: DL
Drawn by: DL
Checked by: CM

Sheet
C4.0
4 of 5 Sheets
Job 19268

T:\2019 PROJECTS\19268\dwg\Adobe-Design\Bridge-Culvert\19268-C4.0 Details.dwg, Doron Lewis, 12/18/2023 3:36:35 PM

BUILDING PLAN CHECK
APPROVED
January 18, 2024
DCHOW BLD23-5070
PERMIT AND RESOURCE MANAGEMENT DEPARTMENT

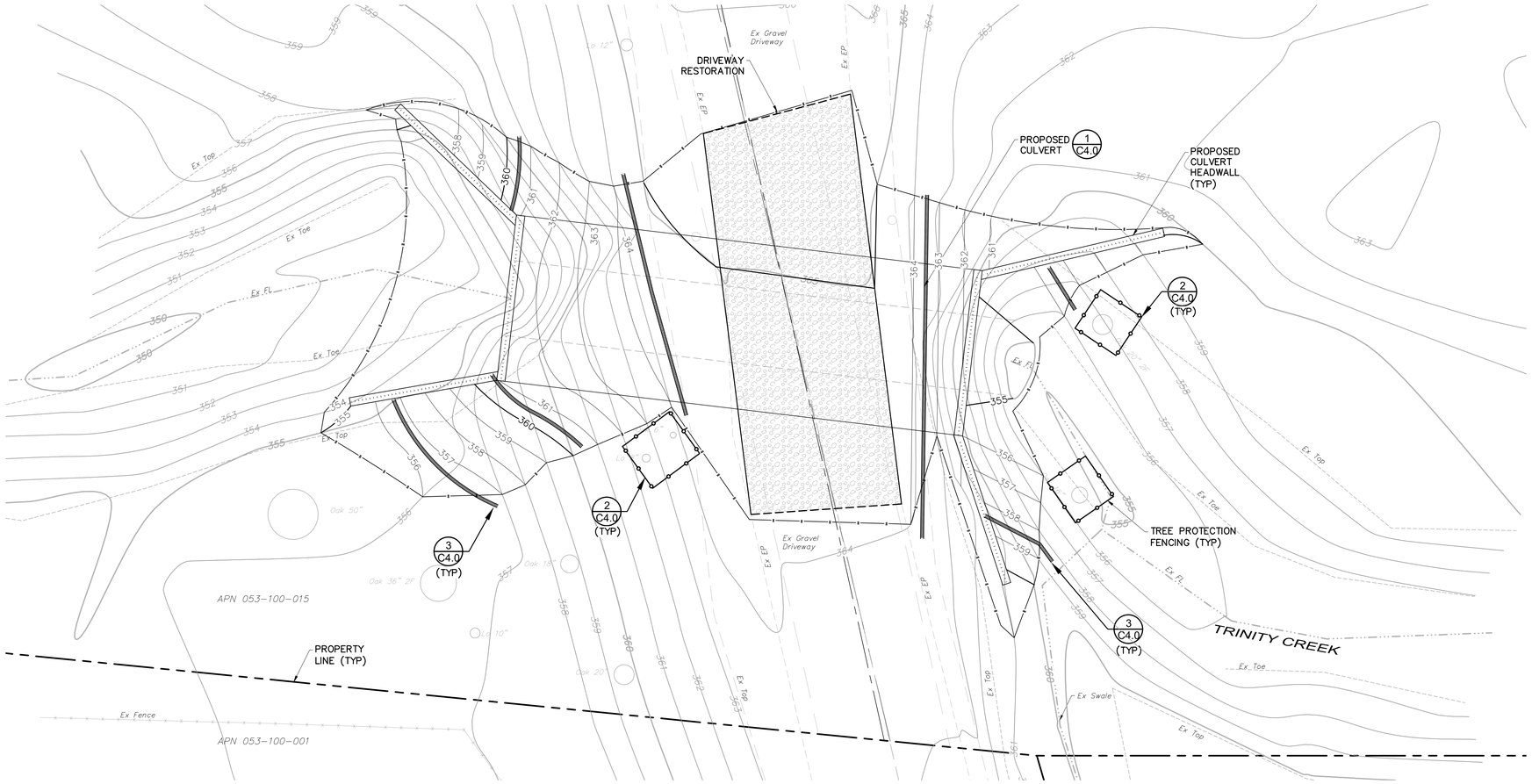

EROSION & SEDIMENT CONTROL PLAN

5' 2.5' 0 2.5' 5' 10' 15'
Graphic Scale: 1" = 5'

HATCHING LEGEND:
12" CL II AB

Revisions			
No.	Date	Description	Approved

adobe associates, inc.
civil engineering | land surveying | wastewater
1220 N. Dutton Ave., Santa Rosa, CA 95401
P. (707) 541-2300 F. (707) 541-2301
Website: www.adobeinc.com
"A Service You Can Count On!"

Timothy L. Schram, RCE 67890
My license expires 6/30/2025

REGISTERED PROFESSIONAL ENGINEER * TIMOTHY LEE SCHRAM * No. 067890 * Exp 6/30/2025 * CIVIL * STATE OF CALIFORNIA

SPARC CULVERT IMPROVEMENT PLAN
EROSION & SEDIMENT CONTROL PLAN

101 Trinity Road
Glen Ellen, California
APN 053-100-015

SCALE: AS SHOWN
Date: December 28, 2023
Design by: DL
Drawn by: DL
Checked by: CM

Sheet
C5.0
5 of 5 Sheets
Job 19268

T:\2019 PROJECTS\19268\dwg\Adobe-Design\Bridge-Culvert\19268- C5.0 Erosion & Sediment Control Plan.dwg, Doran Lewis, 12/18/2023 3:35:14 PM

STRUCTURAL NOTES

GENERAL

1. All work to be in conformance with the 2022 California Building Code (CBC) as adopted by the local governing agency, and any applicable local ordinances.
2. All conditions and dimensions shown on the plans to be verified by the Contractor, any discrepancies that require clarification or revisions to be brought to the attention of the Architect/Engineer before commencing with the work.
3. Contractor to provide the requirements of all structural detail callouts denoted as "TYPICAL" or "TYP" at specifically noted conditions and at all like conditions throughout the project, unless otherwise noted. All details on detail sheets titled as "TYPICAL", and not directly referenced on plans, to be incorporated at occurring locations throughout the project. Requirements of details not denoted or titled as "TYPICAL" to be provided at the specific location shown on the plan and adjacent areas as applicable. Requirements of details denoted as "SIMILAR" or "SIM" to be provided with differences as indicated or implied on referenced details and plans.
4. Details may be depicted diagrammatically. For example, roof pitches, floor/roof/wall thicknesses, framing members, etc., may differ in scale from actual proposed conditions. Details to be understood in context with other drawings conveying structural and architectural design intent.
5. Structural design or review of temporary shoring, additional reinforcing, bracing, formwork, scaffolding, erection methods, etc. required for proper construction of the project to be the responsibility of the Contractor.
6. See Architectural Drawings for wall locations and dimensions, unless otherwise noted. Drawings to not be scaled.
7. See Architectural Drawings for all flashing, waterproofing, finishes and venting requirements.
8. Refer to architectural plans for finish floor elevations, floor depressions, openings, slopes, drains, curbs, pads, embedded items, non-bearing partitions, stairs, etc. Refer to civil, mechanical and electrical plans for utilities, sleeves, pipes, ducts, equipment, etc.
9. Shop drawings are an aid for field placement and are superseded by the structural drawings. It is the responsibility of the General Contractor to make certain that all construction is in full agreement with the latest approved contract documents.
10. Dimensions, unless otherwise shown, are to centerline of columns and beams, or to the face of concrete surfaces and rough framing.
11. All referenced publications to be the latest edition, unless otherwise noted.
12. The contract structural drawings and specifications represent the finished structure, and, except where specifically shown, do not indicate the method or means of construction. The Contractor to supervise and direct the work and to be solely responsible for all construction means, methods, procedures, techniques, safety and sequence.

5100 220401SN1 01-06-23

DESIGN CRITERIA

1. LATERAL LOADS
   A. Wind (Analytical Method):
      Ultimate Design Wind Speed: V_{ult} = 95 mph
      Nominal Design Wind Speed: V_{asd} = 74 mph
      Exposure Category = "C"
      Risk Category = II
      Design Pressures – See Structural Calculations
   B. Earthquake (Equivalent Lateral Force Procedure):
      Mapped Spectral Response Accelerations, S_s = 1.500g, S_1 = 0.600g
      Site Class = "C"
      Spectral Response Coefficients, S_{DS} = 1.200, S_{D1} = 0.560
      Risk Category = "II"
      Seismic Design Category (CBC), SDC = "D"
      Additional design parameters – See Structural Calculations

5104 220401SN1 01-06-23

STRUCTURAL OBSERVATION

1. Structural conformance letters indicating general conformance to the structural contract documents can only be provided by MKM & Associates if structural observation has been performed by MKM & Associates or another Engineer designated by MKM & Associates.
2. The Owner to employ MKM & Associates or another Engineer designated by MKM & Associates to perform structural observation as required by CBC Section 1704.6 and as defined in CBC Section 202. Items to be reviewed are:
   A. Foundation reinforcing and embeds.
   Contractor to coordinate all required site reviews with his schedule and to not cover up any work until it has been reviewed. Contractor to provide at least four working days notice to MKM & Associates prior to all reviews.
3. Structural observation is limited to the periodic visual observation of the structural system for general conformance to the approved plans and specifications at applicable construction stages and at completion of the structural system. Structural observation does not include or waive the responsibility for inspections required by the building department or special inspections required by the CBC.
4. Job site visits by the Engineer are solely for the purpose of determining if the work of the Contractor is proceeding in accordance with the structural contract documents. This limited site observation should not be construed as exhaustive or continuous to check the quality or quantity of the work, but rather periodic in an effort to guard the Owner against defects or deficiencies in the work of the Contractor.

5106 220401SN1 05/26/23

FOUNDATIONS/SITE WORK

1. All site work, drainage systems, foundations and other soil considerations to conform to the recommendations of the geotechnical report and any subsequent recommendations made by the Geotechnical Engineer of Record.
   GEOTECHNICAL ENGINEER: PJC & Associates
   TITLE: Proposed Culvert
   JOB NO: S1411.06 DATE: May 22, 2023
   Soil Classification: Varies – See geotechnical report
   Allowable Soil Bearing Capacity:
   A. DL + LL = 2000 psf
   B. DL + LL + Wind/Seismic = 2667 psf
2. Geotechnical Engineer to review and approve site plans, foundation plans, and foundation details for conformance with design intent of geotechnical report prior to all site work.
3. See geotechnical report for all grading, drainage, fill placement, and building pad preparation requirements.
4. Geotechnical Engineer to review and approve all footing/pier depths before placement of reinforcement and forms.
5. All footing excavations to be neat. Over-excavations to be filled with concrete. All loose soils to be removed from excavations prior to placement of concrete. Wet trenches immediately before placing concrete per Geotechnical Engineer requirements.

5110 220401SN1 08/04/20

STRUCTURAL SUBMITTALS

1. For the following types of work, submit shop drawings and/or certifications to Architect/Engineer and receive acknowledgement that they have reviewed these documents and find them to be in general conformance with the design of the building prior to fabrication:
   A. Concrete mix designs
   For items marked (*) which are deferred submittals, include calculations prepared and signed by a licensed Civil Engineer in the state where the project is located with the submittal.
2. Do not install items included in the deferred submittal items until their design and submittal documents have been approved by the Building Official.
3. All shop drawings must be reviewed and stamped by the General Contractor prior to submittal.
4. Submit a minimum of two sets of prints for all shop drawings specified.
5. Typical loads to be used for the design of structural elements listed above are given in the "DESIGN CRITERIA" Section. Loads given do not include weights of mechanical units or special loading conditions. Contract documents should be reviewed for any areas of special loadings. Submit weights to the structural engineer for all equipment placed in mechanical area for verification of loads used in the design. Report any changes in location or weight of equipment shown on the contract drawings.
6. The use of reproductions of these contract documents by any contractor, subcontractor, erector, fabricator, or material supplier in lieu of preparation of shop drawings signifies his acceptance of all information shown hereon as correct, and obligates himself to any job expense, real or implied, arising due to any errors that may occur hereon.

5248 220401SN1 04-17-23

BUILDING PLAN CHECK
★ APPROVED ★
January 18, 2024
DCHOW BLD23-5070
PERMIT AND RESOURCE MANAGEMENT DEPARTMENT

PRODUCT SUBSTITUTIONS

1. Material substitutions to be submitted to the Architect/Engineer for review prior to use. Substitution reviews may require additional design costs. These additional costs to be paid by the person or company requesting the substitution.
2. Substituted products to have ICC-ES approval and to be installed per product manufacturer's specifications. Substituted product materials, finishes, details, and installation to be of a nature similar to originally specified product so as to not conflict with any intended structural or architectural design conditions, whether depicted or implied on plans or specifications. The substituted product to have design values (i.e. design loads, impact resistance, etc.) which are equal to or greater than the originally specified product. Any and all warranties offered by the originally specified product manufacturer for the item to be substituted to have similar warrantees offered by the substituted product manufacturer.
3. Submit to the Architect/Engineer a list of only the items to be substituted, complete with all pertinent material including but not limited to manufacturer's supplied design loads listed for the originally specified product and the proposed substitution product.

5108 220401SN1 1/1/14

CONCRETE & REINFORCEMENT

1. Concrete to meet the following requirements:

	28-Day Strength	Slump	MSA	W/CM	Admixtures
FOUNDATIONS	3000 psi	4"±1"	1-1/2"	0.55	N/A
RETAINING WALLS	3000 psi	4"±1"	1"	0.55	N/A

2. Portland cement to conform to ASTM C150, Type II.
3. All concrete to be sampled and tested by a qualified technician in accordance with ACI 318-19, section 26.12.
   Exception: When approved by the Building Official and no special inspection is required and the total quantity of a given class of concrete is less than 50 cubic yards.
4. Above table assumes no admixtures. Admixture dosage requirements depend on job conditions at the time of concrete placement. Use admixtures in strict accordance with manufacturers recommendations.
5. Reinforcing steel to conform to ASTM A615/A706 or A706, grade 60. Steel to be kept clean and free of rust scales. Reinforcing to be welded to be ASTM A706, grade 60.
   A. Electrodes for welding reinforcing to be as specified below:
      SMAW: E90XX low hydrogen
6. Reinforcing bars to be in lengths as long as practicable. Reinforcing bars requiring bending in the field to be "cold bent" with proper radius per detail 5/SD1. At corners and intersections bars to return a minimum of 18". Provide minimum laps at all reinforcing bar splices per detail 5/SD1.
7. Minimum reinforcing steel cover requirements, unless otherwise noted:
   A. Cast against and exposed to earth: 3"
   B. Formed surfaces: 2"
8. Minimum clear distance between bars to be three times the bar diameter or two inches, whichever is greater.
9. Reinforcing, anchor bolts and inserts to be rigidly held in place prior to placing concrete.
10. Consolidate all concrete by vibration, spading, rodding or forking. Thoroughly work concrete around reinforcement and embedded items. Eliminate all air and stone pockets which may cause honeycombing, pitting or planes of weakness.
11. Construction joints in concrete are to be clean and free of laitance, and to be wetted with standing water removed immediately before new concrete is placed.
12. CURING
   A. Exposed surfaces of concrete to be properly cured in a moist condition at a temperature above 50 degrees Fahrenheit. Exposed concrete to be thoroughly wetted as necessary to maintain surface in a moist condition. See ACI 308 latest edition.
   B. For curing of concrete cast and finished flat, cure by one of the following methods for a minimum of seven (7) days U.O.N.
      1) Burlap: Cover concrete with wet burlap as soon as it can be placed without marking the surface. Keep the burlap continuously wet and in place during the curing period
      2) Cure/Sealer: Verify that other finishes will not be affected by cure/sealer compound. Cure/sealer to be a high-solids-type with a maximum moisture loss of 0.55kg/m² at a coverage of 200 ft²/gallon. Upon completion of finishing, apply an approved cure/sealer to flatwork per manufacturer's instructions.
13. Concrete cementitious material to contain no more than 30%, by weight, of fly ash (ASTM C618, Type C or F) and/or slag (ASTM C989). Provide mix design to Architect/Engineer for review prior to ordering.
14. Expansion anchor bolts and powder driven fasteners (PDF) to not be installed until concrete has reached design strength. PDF to not be used in curbs U.O.N.
15. High-strength, non-shrink grout to be Master Builders "MasterFlow 100".

5000 220401SN1 01/16/23

SPECIAL INSPECTION

1. GENERAL
   A. In addition to the inspections required by Section 110 of the CBC, the Owner to employ a Special Inspector during construction on the types of work indicated below. All special inspection to be performed in accordance with Section 1704 of the CBC.
   B. Inspections: Special inspections that are required by the building codes, local building departments, or these plans to be performed by the firm noted in "SCOPE OF WORK" below.
2. SPECIAL INSPECTOR DUTIES
   A. After due notice from the Contractor, provide qualified personnel as necessary.
   B. Perform inspections as follows:
      1) Perform specified reviews, inspections, sampling and testing of materials as indicated below.
      2) Verify conformance of all special inspected work with the approved plans.
      3) Verify that the work complies with specified standards and methods of construction.
      4) Ascertain compliance of materials with requirements of the approved plans.
   C. Promptly notify Architect (Designer), Engineer and Contractor of observation irregularities or deficiencies within one working day. If irregularities or deficiencies are uncorrected, the Special Inspector to notify the Architect (Designer), Engineer and the governing agency.
   D. Promptly submit written report of each test and inspection with a copy each to the Architect (Designer), Engineer, Owner, Contractor, Governing Agency and other designated persons within three working days. Each report to include:
      1) Date Issued.
      2) Project title and number.
      3) Testing laboratory name, address and telephone number.
      4) Name and signature of laboratory test or inspection.
      5) Date and time of sampling, test or inspection.
      6) Type of inspection or test.
      7) Location of sample or test in the project.
      8) Test results. Report to indicate compliance or noncompliance with approved details and plans.
   E. In addition to the above required reports, the Special Inspector to submit a final signed report stating whether the work requiring special inspection was, to the best of his knowledge, in conformance with the approved plans and the applicable provisions of the California Building Code.
3. SCOPE OF WORK (By: Special Inspector Company/Firm)
   A. Grading, Drainage, Excavation, and Fill
      By: PJC & Associates
      During earthwork excavations, drainage installation, grading and filling operations.
   B. Foundation Excavations
      By: PJC & Associates
      During excavation of drilled piers and/or footings.
   C. Reinforcing Steel
      By: PJC & Associates
      Inspection of all reinforcing steel prior to closing of forms and prior to concrete delivery.
      EXCEPTION: Non-structural slab on grade.
   D. Concrete
      By: PJC & Associates
      During the taking of compression test specimens, slump test and placing of all reinforced concrete and pneumatically placed concrete.
      EXCEPTION: Non-structural slab-on-grade.

5006 220401SN1 09/20/21

ABBREVIATIONS

∠ or L	Angle	FIN GR	Finish Grade
@	At	FHMS	Flat Head Machine Screw
A.B.	Anchor Bolt(s)	FHWS	Flat Head Wood Screw
ABV	Above	F.J.	Floor Joist
AC	Asphaltic Concrete	F.N.	Face Nail
ADDL	Additional	F.O.C.	Face of Concrete
ADJ	Adjacent	F.O.P.	Face of Post
AFF	Above Finish Floor	F.O.S.	Face of Stud
ALT	Alternate	F.O.H.C.	Free of Heart Center
APA	American Plywood Association	FRMG	Framing
APRX	Approximate	F.S.	Far-Side
ASTM	American Society for Testing and Materials	FT	Foot / Feet
A.T.R.	All-Threaded Rod	FTG	Footing
AYC	Alaska Yellow Cedar	GA	Gauge or Gage
		GALV	Galvanized
BFF	Below Finish Floor	G.I.	Galvanized Iron
BLDG	Building	GLB	Glu-Laminated Beam
BLK	Block(ing)	GR.BM.	Grade Beam
BLW	Below	G.T.	Girder Truss
BM	Beam	GYP BD	Gypsum Board
B.N.	Boundary Nail		
BOT	Bottom	H.D.G.	Hot-Dipped Galvanized
BRG	Bearing	HDR	Header
BTWN	Between	HGR	Hanger
		HORIZ	Horizontal
CANT	Cantilever	H.S.	High Strength Hollow Structural Section (Tube)
CBC	California Building Code	HSS	
C.J.	Control Joint	HT	Height
℄	Centerline		
CLG	Ceiling	IBC	International Building Code
CLR	Clear	ICC	International Code Council
C.M.U.	Concrete Masonry Unit	ICC-ES	ICC Evaluation Service, Inc.
COL	Column	I.C.F.	Insulated Concrete Form(s)
COLL	Collector	I.D.	Inside Diameter
COMB	Combination	I.F.	Inside Face
CONC	Concrete	INFO	Information
COND	Condition	INT	Interior
CONN	Connection	JST	Joist
CONST	Construction	JT	Joint
CONT	Continuous		
CJP	Complete Joint Penetration	K	KIP(S) (1000 lbs)
CSK	Countersink	KD	Kiln Dried
		K.P.	King Post
d	Penny (Nail size)	LBS or #	Pounds
DBL	Double	LG	Long
DET	Detail	L.L.	Live Load
D.F.	Douglas Fir	L.L.H.	Long Leg Horizontal
DIA or ⌀	Diameter	L.L.V.	Long Leg Vertical
DIAG	Diagonal	LOC	Location(s)
DIM	Dimension		
DL	Dead Load	MAX	Maximum
D.T.	Drag Truss	M.B.	Machine Bolt(s)
DWG	Drawing	MBM	Metal Building Manufacturer
		MFR	Manufacturer (Manufactured)
(E)	Existing	MKM	MKM & Associates
EA	Each	MIW	Malleable Iron Washer
E.B.	Expansion Bolt	MIN	Minimum
E.E.	Each End	MISC	Miscellaneous
E.F.	Each Face	MSA	Maximum Size Aggregate
ELEC	Electrical	MTL	Metal
EL or ELEV	Elevation		
EMB	Embed(ment)	(N)	New
E.N.	Edge Nail	N/A	Not Applicable
ENGR	Engineer	N.I.C.	Not In Contract
E.O.R.	Engineer of Record	NO. or #	Number
EQ	Equal or Equivalent	N.S.	Non-shrink (or Near-Side)
E.S.	Each Side	N.T.S.	Not to Scale
E.W.	Each Way		
EXT	Exterior	O/	Over (On)
		O.C.	On Center
FDN	Foundation	O.D.	Outside Diameter
FLR	Floor	O.F.	Outside Face
FF EL	Finish Floor Elevation	O.H.	Opposite Hand
		OPNG	Opening
		OPP	Opposite
		OPT	Optional
		O.S.B.	Oriented Strand Board

PHSMS	Pan Head Sheet Metal Screw		
PARL	Parallel		
PERP	Perpendicular		
P.D.F.	Powder Driven Fastener		
PERF	Perforated		
⌀	Plate		
PLY	Plywood		
PJP	Partial Joint Penetration		
P.L.F.	Pounds Per Lineal Foot		
P.S.I.	Pounds Per Square Inch		
P.S.F.	Pounds Per Square Foot		
P.T.	Preservative Treated		
P.T.D.F.	Preservative Treated Douglas Fir		
P-T	Post-Tension(ed) (ing)		
(#)	Quantity (Number of items)		
R	Radius		
R.C.	Relative Compaction		
REINF	Reinforcing		
RET	Retaining		
REQD	Required		
REV	Revision		
R.O.	Rough Opening		
RHMS	Round Head Machine Screw		
RHWS	Round Head Wood Screw		
RWD	Redwood		
S.A.D.	See Architectural Drawings		
S.C.D.	See Civil Drawings		
S.M.D.	See Mechanical Drawings		
SCHED	Schedule		
S.S.D.	See Structural Drawings		
SCL	Structural Composite Lumber (See "CARPENTRY Notes)		
SHT	Sheet		
SHTG	Sheathing		
SMF	Sheet Metal Flashing		
SIM	Similar		
SP	Space(s)		
SPECS	Specifications		
SQ	Square		
S.S.	Select Structural		
STAG	Staggered		
STD	Standard		
STIF	Stiffener		
SST	Stainless Steel		
STL	Steel		
STRL	Structural		
SIP	Structural Insulated Panel		
S.W.	Structural Sheathed Wall		
SYMM	Symmetrical		
T&B	Top & Bottom		
T&G	Tongue & Groove		
THK	Thick or Thickness		
THRD	Threaded		
T.N.	Toenail		
T-U	Tilt-Up (Concrete Panel)		
TS	Tube Steel		
TYP	Typical		
U.O.N.	Unless Otherwise Noted		
U.R.M.	Unreinforced Masonry		
VERT	Vertical		
V.I.F.	Verify In Field		
W/	With		
W/CM	Water-Cement Ratio		
W.C.	Western Cedar		
WD	Wood		
W.P. or W.PT.	Work Point		
WT	Weight		
WWR	Welded Wire Reinforcement		

SYMBOLS LEGEND (SOME SYMBOLS MAY NOT BE APPLICABLE TO PROJECT)

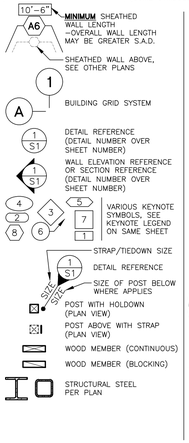

STRUCTURAL SHEET INDEX	
SHEET	DESCRIPTION
SN1	STRUCTURAL NOTES
S1	CULVERT PLAN
SD1	STRUCTURAL DETAILS

MKM & Associates
structural engineering
ESTABLISHED 1983
5880 Commerce Blvd, Suite 106
Rohnert Park, CA 94928
Phone: (707)578-8185
Fax: (707) 578-7153
Internet:
www.mkmassociates.com

REGISTERED PROFESSIONAL ENGINEER
JOHN MERLE COOK
No. SE 2927
STRUCTURAL
STATE OF CALIFORNIA
1/17/2024

-Copyright © 2023 MKM & Associates-
This drawing is an instrument of service and is the sole property of MKM & Associates. Any use of this drawing without written consent by MKM & Associates is prohibited. Drawing scales as indicated are for reference only and are not intended to accurately depict actual or designed conditions. Written dimensions shall govern.

PROJECT MANAGER
Josh Wallace

STRUCTURAL OBSERVATION REQUIRED
SEE "STRUCTURAL OBSERVATION" NOTES ON SHEET SN1

SPARC CULVERT REPLACEMENT

12201 Highway 12
Glen Ellen, California, 95442

06-14-23	JS | ER
BUILDING PERMIT APPLICATION	

ISSUE INFORMATION

Designer:	Josh S
PD: ZHD	SR#: --
Job:	220401
Checked by:	--
Plot Date:	1/17/2024

Sheet Title:
STRUCTURAL NOTES

Sheet
SN1

\\SERVER\PROJECTS\2022\SPARC CULVERT REPLACEMENT 220401\CAD\220401SN1.DWG 1/17/2024 8:22 AM Plotted by (Last Drafter): EFREN890

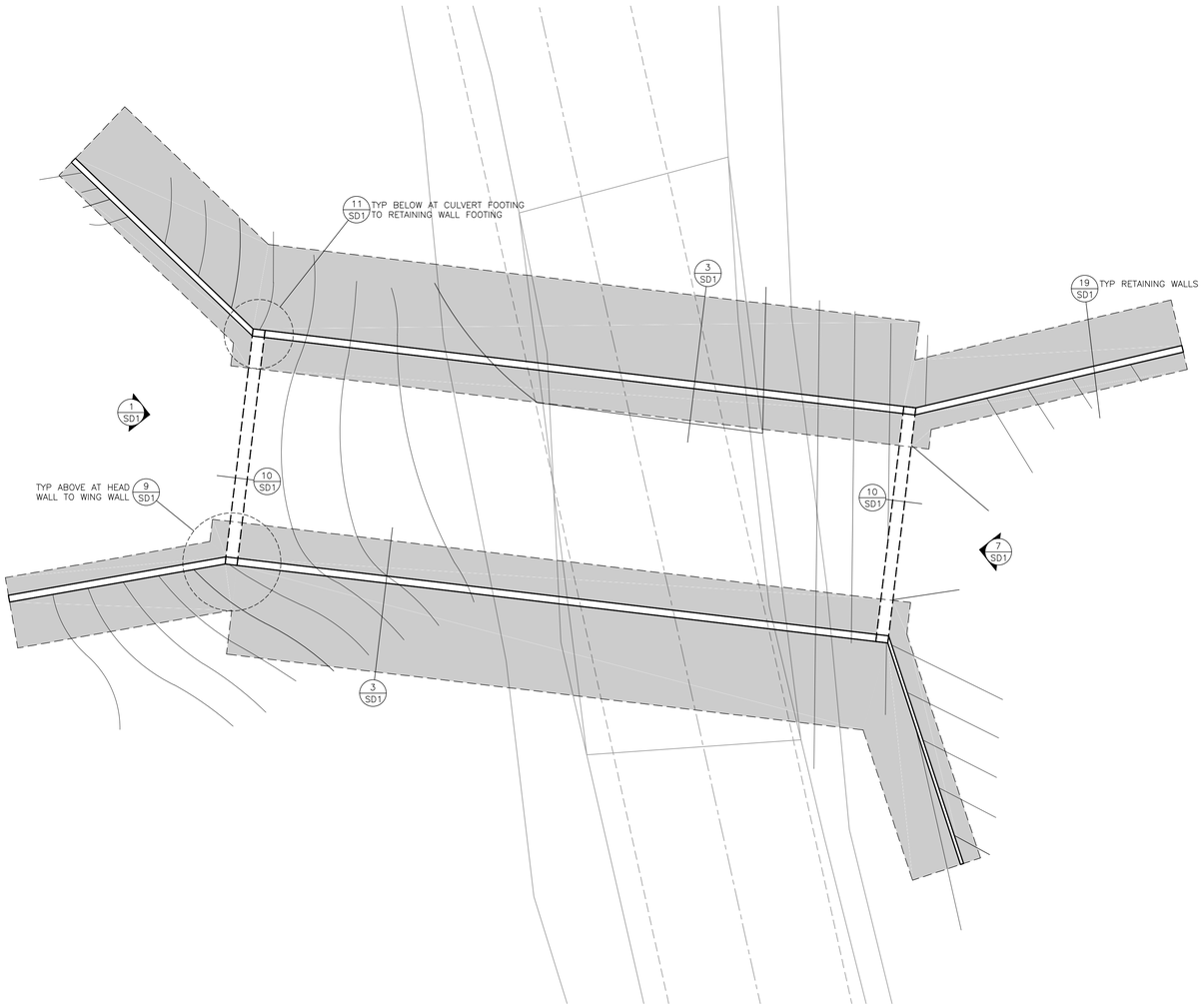

CULVERT PLAN

0 1" 2" 4" 8" 16" 32"

BUILDING PLAN CHECK
APPROVED
January 18, 2024
DCHOW BLD23-5070
PERMIT AND RESOURCE MANAGEMENT DEPARTMENT

MKM & Associates
Structural engineering
ESTABLISHED 1983
5880 Commerce Blvd. Suite 105
Rohnert Park, CA 94928
Phone: (707)578-8185
Fax: (707) 578-7153
Internet:
www.mkmassociates.com

REGISTERED PROFESSIONAL ENGINEER
JOHN MERLE COOK
No. SE 2927
STRUCTURAL
STATE OF CALIFORNIA

1/17/2024

-Copyright © 2023 MKM & Associates-
This drawing is an instrument of service and is the sole property of MKM & Associates. Any use of this drawing without written consent by MKM & Associates is prohibited.
Drawing scales as indicated are for reference only and are not intended to accurately depict actual or designed conditions. Written dimensions shall govern.

PROJECT MANAGER
Josh Wallace

STRUCTURAL OBSERVATION REQUIRED
SEE "STRUCTURAL OBSERVATION" NOTES ON SHEET SN1

SPARC CULVERT REPLACEMENT
12201 Highway 12
Glen Ellen, California, 95442

06-14-23 JS ER
BUILDING PERMIT APPLICATION

ISSUE INFORMATION

Designer:	Josh S
PD: ZHD	SR#: --
Job:	220401
Checked by:	--
Plot Date:	1/17/2024

Sheet Title:
CULVERT PLAN

Sheet
S1

\\SERVER\PROJECTS\2022\SPARC CULVERT REPLACEMENT 220401\CAD\220401S1.DWG 1/17/2024 8:23 AM Plotted by (Last Drafter): EFREN890

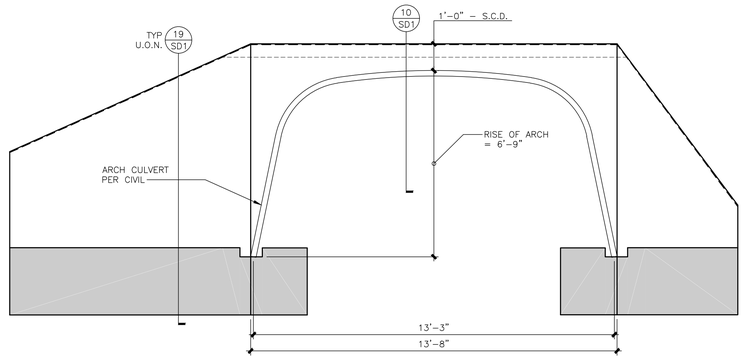

1 ARCH CULVERT – WEST

D3/8

SK9 K6o 04/05/23 6997 220401SD1 2.5x1

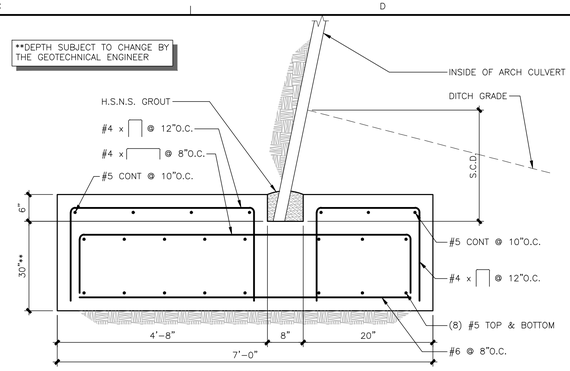

3 ARCH CULVERT FOOTING

SK3 K6A 04/04/23 220401SD1 6829 1.5x1

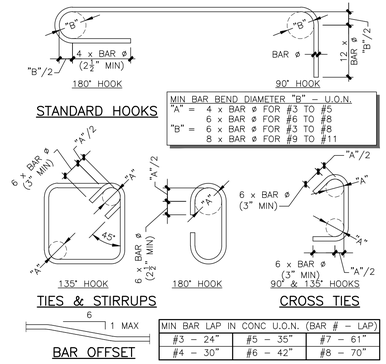

5 TYPICAL REINFORCING STEEL DATA

*D3/4

SK7 A3A, A39(i)–(iii), 7A 40a–f 220401SD1 4816 09–20–21 1x1

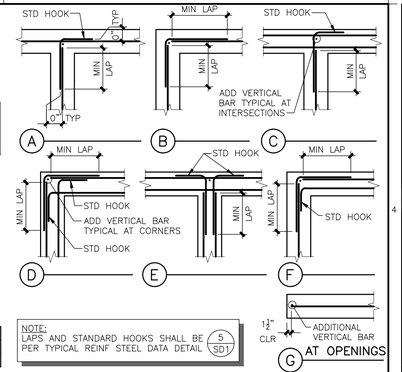

6 TYPICAL CONC WALL/FOOTING REINF

D1/2

SK6 A3A, B2(i)(ii)(iii) 220401SD1 6116 08–04–17 1x1

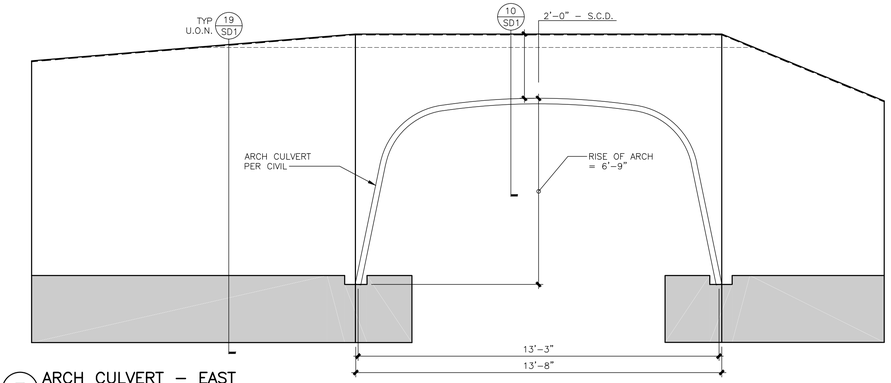

7 ARCH CULVERT – EAST

D3/8

SK8 K6o 04/05/23 6997 220401SD1 2.5x1

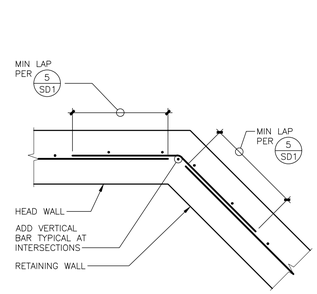

9

D3/4

SK5 ZHD 03/24/22 220401SD1 1x1

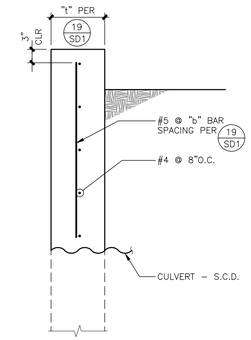

10

D3/4

SK4 ZHD 03/25/22 220401SD1 1x1

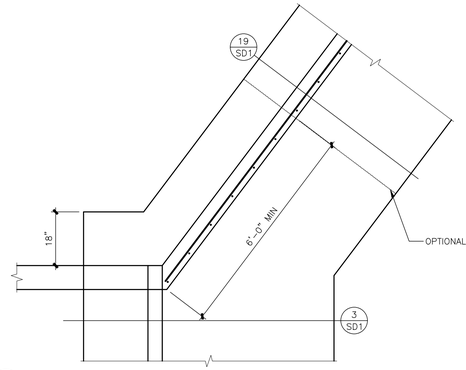

11

D1/2

SK1.1 ER 06/8/23 220401SD1 1.5x1

SCHEDULE								
"H"	"L"	"X"	"t"	"a" BAR	"b" BAR*	"LAP"	"D"	"K"
4'–0"	3'–0"	1'–0"	8"	#4 @ 12"	#4 @ 12"	30"	30"	--
6'–0"	4'–0"	1'–0"	8"	#5 @ 12"	#4 @ 12"	30"	30"	6"

SCHEDULE										
"H"	"h"	"L"	"X"	"t1"	"t2"	"a" BAR	"b" BAR*	"LAP"	"D"	"K"
8'–0"	3'–0"	6'–6"	1'–6"	10"	8"	#5 @ 6"	#5 @ 12"	36"	30"	12"
9'–0"	3'–0"	7'–6"	1'–6"	10"	8"	#5 @ 6"	#5 @ 12"	36"	30"	12"

*"b" BAR & LAP MAY BE ELIMINATED IF "a" BAR IS CONT TO TOP OF WALL

NOTE:
1. SEE "SN" SHEETS FOR STRUCTURAL NOTES.
2. SEE SITE PLAN AND GEOTECHNICAL REPORT FOR ADDITIONAL DRAINAGE AND FILTER FABRIC REQUIREMENTS.
3. PROVIDE WATERPROOFING OR DAMP–PROOFING AS REQUIRED PER SECTION 1805 OF THE CBC AND PER ARCHITECTURAL DRAWINGS.
4. DRAIN PERFORATED PIPE TO DAYLIGHT AWAY FROM STRUCTURES.
5. AT STEMS LESS THAN 10" IN THICKNESS, OMIT #5 VERTICALS & #5.

DESIGN CRITERIA
ACTIVE EQUIVALENT FLUID PRESSURE = **40 pcf**
PASSIVE EQUIVALENT FLUID PRESSURE = **300 pcf**
FRICTION COEFFICIENT = **0.35**
ALLOWABLE SOIL BEARING CAPACITY = **2000 psf + FOOTING WEIGHT**
SEISMIC LOAD "P_E" = **10.7xH² at 1/3H**

**DEPTH TO BE DETERMINED BY THE GEOTECHNICAL ENGINEER

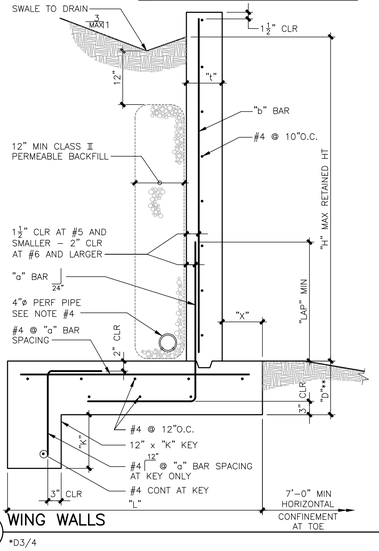

*"b" BAR & LAP MAY BE ELIMINATED IF "a" BAR IS CONT TO TOP OF WALL

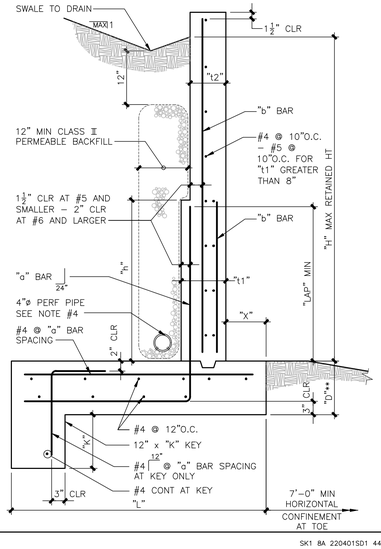

19 WING WALLS

*D3/4

SK1 8A 220401SD1 4403A 03–29–23 2.5x2

BUILDING PLAN CHECK
APPROVED
January 18, 2024
DCHOW BLD23-5070
PERMIT AND RESOURCE MANAGEMENT DEPARTMENT

MKM & Associates
Structural engineering
ESTABLISHED 1983
5880 Commerce Blvd, Suite 105
Rohnert Park, CA 94928
Phone: (707)578-8185
Fax: (707) 578-7153
Internet:
www.mkmassociates.com

REGISTERED PROFESSIONAL ENGINEER
JOHN MERLE COOK
No. SE 2927
STRUCTURAL
STATE OF CALIFORNIA

1/17/2024

–Copyright © 2023 MKM & Associates–
This drawing is an instrument of service and is the sole property of MKM & Associates. Any use of this drawing without written consent by MKM & Associates is prohibited.
Drawing scales as indicated are for reference only and are not intended to accurately depict actual or designed conditions. Written dimensions shall govern.

PROJECT MANAGER
Josh Wallace

STRUCTURAL OBSERVATION REQUIRED
SEE "STRUCTURAL OBSERVATION" NOTES ON SHEET SN1

SPARC CULVERT REPLACEMENT

12201 Highway 12
Glen Ellen, California, 95442

06–14–23	JS | ER
BUILDING PERMIT APPLICATION	

ISSUE INFORMATION

Designer:	Josh S
PD: ZHD	SR#: --
Job:	220401
Checked by:	--
Plot Date:	1/17/2024

Sheet Title:
STRUCTURAL DETAILS

Sheet
SD1

U:\2022\SPARC CULVERT REPLACEMENT 220401\CAD\220401SD1.DWG 1/17/2024 8:23 AM Plotted by (Last Drafter): EFRENB90

permit SONOMA

County of Sonoma
Permit & Resource Management Department

STATEMENT OF SPECIAL INSPECTIONS

CNI-033

Name of Owner:

Address: 12201 Highway 12

Permit Number:

Job Description: Culvert

This Statement of Special Inspections is submitted to outline the requirements of 2019 CBC Chapter 17.

Included are:

A. Schedule of special inspections and tests applicable to this project:

1. Special inspections, per Section 1704 & 1705;
2. Special inspection for seismic resistance, per Sections 1704.3.2, 1705.12, 1705.13;
3. Structural observations, per Section 1704.6;
4. Material testing and/or load testing, per Sections 1706 through 1709.

B. List of the special inspector, testing agencies, and registered design professionals that will be retained to conduct the applicable tests, observations, and testing required;

C. Contractor's statement of responsibility, per Section 1704.4.

Prepared By

Registered Design Professional in Responsible Charge: John Cook

License Number: 2927

Signature:

Date: 07/05/2023

Owner's Authorization

Owner:

Signature:

Building Official Approval:

BUILDING PLAN CHECK
APPROVED
January 18, 2024
DCHOW BLD23-5070
PERMIT AND RESOURCE MANAGEMENT DEPARTMENT

Special inspections and testing, and structural observations, shall be performed in accordance with the approved plans and specifications, this statement, approved testing procedures, applicable listing information for fabricated items, and CBC Section 17.

The Schedule of Special Inspections summarizes the special inspections and tests required. Special inspectors shall refer to the approved plans and specifications for detailed special inspection requirements. Any additional tests or observations required by the approved plans, specifications, or required by the building official shall also be performed.

Interim reports will be submitted to the building official and the registered design professional in responsible charge, in accordance with CBC Section 1704.2.4.

At the conclusion of work included in the permit, a report of special inspections and structural observations shall be submitted to the building inspector. The final report shall document:

A. Required special inspections;

B. Final results of structural testing;

C. Correction of discrepancies noted in inspections;

D. Written statement of structural observations, and identification of any reported deficiencies which, to the best of the structural observer's knowledge, have not been resolved.

This plan has been developed with the understanding that the building official shall:

A. Review and approve the qualifications of special inspectors who shall perform inspections;

B. Review submitted inspection reports;

C. Perform inspections as required by the locally adopted building codes.

Schedule of Inspections, Testing Agencies, and Inspectors

The following are the testing agencies, registered design professionals, and special inspectors that will be retained to conduct tests, inspections, and structural observations for this project:

	Responsibility	Firm	Address, telephone, e-mail
1.	Special Inspection (except for geotechnical)		
2.	Material Testing	PJC & Associates	600 Martin Ave 707-584-4804
3.	Geotechnical Inspections	PJC & Associates	
4.	Structural Observations	MKM & Associates	5880 Commerce Blvd 707-578-8185

Special inspections can be performed by agencies approved by Permit Sonoma listed on CNI-014 Special Inspection Agency Recognition List. Special inspections may also be performed by the engineer of record where the engineer has submitted the appropriate certification during the plan check process (e.g. Structural Welding Special Inspector, Reinforced Concrete Special Inspector, etc.).

Seismic Requirements (Section 1704.3.2)

Identify the designated seismic systems and seismic-force-resisting systems subject to special inspections per CBC Section 1705.12. Identify any required testing and qualification for seismic resistance per CBC Section 1705.13.

Summary of required special inspections, structural testing, and structural observations

Briefly describe required special inspections and structural observations for this project. Full schedule of inspections are those that are checked off on the following pages. Include additional sheets as necessary to identify frequency and extent of structural observations.	
Special Inspections:	Structural Observations:
A. Grading, Drainage, Excavation, and Fill - During earthwork excavations, drainage installation, grading and filling operations. B. Foundation Excavations - During excavation of drilled piers and/or footings. C. Reinforcing Steel - Inspection of all reinforcing steel prior to closing of forms and prior to concrete delivery. D. Concrete - During the taking of compression test specimens, slump test and placing of all reinforced concrete and pneumatically placed concrete.	Foundation reinforcing and embeds.

Schedule of Special Inspections

Column headers:

C = Full-time observation of work by an approved special inspector while the work is being performed.
P = Intermittent observation of work by an approved special inspector where the work has been performed and at the completion of work.

Box Entries:

X = Denotes either "C" continuous or "P" periodic inspections, according to column placement.
-- = Denotes that an activity is either a one-time activity or its frequency is defined in some other manner.

Notes/Referenced Standards: Indicates the referenced standard applicable to the criteria, method, and frequency of the special inspection or testing required. Additional notes may be included in this box denoting frequency of inspections or the special inspection agency responsible for the particular inspection item.

Additional details regarding inspections and tests are provided in the project specifications or notes on the drawings.

VERIFICATION AND INSPECTION

1704.2.5 & 1705.10 - Fabricated Items	C	P	✓ if Req'd	Notes/Referenced Standards
Fabrication and implementation	--	--	☐	
Fabricator approval and certificate of compliance	--	--	☐	CBC 1704.2.5.1

1704.6 – Structural Observations	C	P	✓ if Req'd	Notes/Referenced Standards
Prior to the commencement of observations, the structural observer shall submit to the building official a written statement identifying the frequency and extent of structural observations	--	--	☐	
At the conclusion of work included in the permit, the structural observer shall submit to the building official a written statement that the site visits have been made and identify any reported deficiencies which have not been resolved	--	--	☐	
Structural observations for structures	--	--	☑	CBC 1704.6.1
Structural observations for seismic resistance	--	--	☐	CBC 1704.6.2

1705.1.1 – Special Cases	C	P	✓ if Req'd	Notes/Referenced Standards
Construction materials and systems that are alternatives to materials and systems prescribed by the applicable code	--	--	☐	
Unusual design applications of materials described in the applicable code	--	--	☐	
Materials and systems required to be installed in accordance with manufacturer's instructions that prescribe requirements not contained in the applicable code or referenced standards	--	--	☐	List code reports (attached to construction documents) for each applicable material/system.

1705.2 – Steel Construction, Quality Assurance per AISC 360	C	P	✓ if Req'd	Notes/Referenced Standards
A. Fabricator and erector documents (verify reports and certificates as listed in AISC 360, Section N3.2 for compliance with construction documents. Includes structural steel, castings, forgings, fasteners, rods, welding, anchors, braces, stiffeners, member locations, joint details, etc.)	--	X	☑	AISC 360: Chapter N
B. Identification markings for structural steel materials conform to ASTM standards specified in the approved construction documents (e.g., structural shapes, castings, forgings, bolts, washers, nuts, rods, consumables for welding, anchors, etc.)	--	X	☐	AISC 360: A3
C. Embedments (verify diameter, grade, type, length, and depth of embedded item)	--	X	☐	AISC 360: N5.8
D. Verify compliance with details on the construction documents, such as braces, stiffeners, member locations, and proper application of joint details at each connection		X	☐	AISC 360: N5.8, The acceptance or rejection of joint details and the correct application of joint details shall be documented
E. Structural Steel Welding 1. Inspection Tasks **Prior** to Welding (Observe, or perform for each welded joint or member, the QA tasks listed in AISC 360, Table N5.4-1)	Random Basis (O) or Each Joint or Member (P) per applicable table	Same as prev.	☐	See form CNI-033A Statement of Special Inspections Steel Appendix.

1705.2 – Steel Construction, Quality Assurance per AISC 360 (Continued)	C	P	✓ if Req'd	Notes/Referenced Standards
2. Inspection tasks **During** Welding (Observe, or perform for each welded joint or member, the QA tasks listed in AISC 360, Table N5.4-2)	Random Basis (O) or Each Joint or Member (P) per applicable table	Same as prev.	☐	See form CNI-033A Statement of Special Inspections Steel Appendix.
3. Inspection tasks **After** Welding (Observe, or perform for each welded joint or member, the QA tasks listed in AISC 360, Table N5.4-3)	Random Basis (O) or Each Joint or Member (P) per applicable table	Same as prev.	☐	See form CNI-033A Statement of Special Inspections Steel Appendix.
4. Nondestructive Testing (NDT) of welded joints:				AISC 360: N5.5
a. Complete penetration groove welds 5/16" or greater in risk category III or IV		X	☐	N5.5b
b. Complete penetration groove welds 5/16" or greater in risk category II		X	☐	N5.5b
c. Welded joints subject to fatigue when required by AISC 360, App. 3, Table A-3.1		X	☐	N5.5c
d. Fabricator's NDT reports when fabricator performs NDT		X	☐	N5.5g
F. Inspection of High-Strength Bolting				
1. Inspection tasks Prior to Bolting (Observe, or perform tasks for each bolted connection, in accordance with QA tasks listed in AISC 360, Table N5.6-1)	Random Basis (O) or Each Joint or Member (P) per applicable table	Same as prev.	☐	See N5.6 for exceptions based on installation method. See form CNI-033A Statement of Special Inspections Steel Appendix.

1705.2 – Steel Construction, Quality Assurance per AISC 360 (Cont.)	C	P	✓ if Req'd	Notes/Referenced Standards
2. Inspection tasks During Bolting (Observe the QA tasks listed in AISC 360, Table N5.6-2) a. Pre-tensioned and slip critical joints b. Snug-tight joints	Random Basis (O) or Each Joint or Member (P) per applicable table	Same as prev.	☐ ☐	See N5.6 for exceptions based on installation method. See form CNI-033A Statement of Special Inspections Steel Appendix.
3. Inspection tasks After Bolting (Perform tasks for each bolted connection in accordance with QA tasks listed in AISC 360, Table N5.6-3)	Random Basis (O) or Each Joint or Member (P) per applicable table	Same as prev.	☐	See N5.6 for exceptions based on installation method. See form CNI-033A Statement of Special Inspections Steel Appendix.
G. Inspection of steel elements of composite construction prior to concrete placement in accordance with QA tasks listed in AISC 360, Chapter N			☐	AISC 360 N1 Commentary
H. Cold-formed Steel Deck: Spec. Insp. & QA for Welding			☐	CBC 1705.2.2, SDI QA/QC-2017
I. Installation of open-web steel joists and joist girders				Table 1705.2.3
1. End connections – welding or bolted		X	☐	CBC 2207.1
2. Bridging – horizontal or diagonal				
a. Standard bridging		X	☐	CBC 2207.1
b. Bridging that differs from the SJI specifications listed in Section 2207.1		X	☐	
J. Cold-formed steel trusses spanning 60 feet or greater		X	☐	CBC 1705.2.4

Table 1705.3 – Concrete Construction	C	P	✓ if Req'd	Notes/Referenced Standards
A. Inspection reinforcement, including prestressing tendons, and verify placement			☑	ACI 318 Ch. 20, 25.2, 25.3, 26.6.1-26.6.3, CBC 1908.4
B. Reinforcing bar welding:			☐	CBC 1705.3.1

Table 1705.3 – Concrete Construction (Cont.)	C	P	✓ if Req'd	Notes/Referenced Standards
1. Verify weldability of reinforcing bars other than ASTM A706		X	☐	AWS D1.4, ACI 318: 26.6.4,
2. Inspect single-pass fillet welds, maximum 5/16"		X	☐	
3. Inspect all other welds		X	☐	
C. Inspect anchors cast in concrete		X	☐	ACI 318: 17.8.2
D. Inspect anchors post-installed in hardened concrete members (see footnote b. Table 1705.3):				
1. Adhesive anchors installed in horizontally or upwardly inclined orientations to resists sustained tension loads	X		☐	ACI 318: 17.8.2.4
2. Mechanical anchors and adhesive anchors not defined in 4.a		X	☐	ACI 318: 17.8.2
E. Verify use of required design mix		X	☑	ACI 318: Ch. 19, 26.4.3, 26.4.4, CBC 1904.1, 1904.2, 1908.2, 1908
F. Prior to concrete placement, fabricate specimens for strength tests, preform slump and air tests, and determine the temperature of the concrete	X		☑	ASTM C172, ASTM C31, ACI 318: 26.5, 26.12, CBC 1908.10
G. Inspect concrete and shotcrete placement for proper application techniques	X		☐	ACI 318: 26.5, CBC 1908.6, 1908.7, 1908.8
H. Verify maintenance of specified curing temperature and techniques		X	☐	ACI 318: 26.5.3-26.5.5, CBC 1908.9
I. Inspect prestressed concrete for:				
1. Application of prestressing forces;	X		☐	ACI 318: 26.9.2.1
2. Grouting of bonded prestressing tendons	X		☐	ACI 318: 26.9.2.3
J. Inspect erection of precast concrete members		X	☐	ACI 318: Ch. 26.9
K. Verify in-situ concrete strength, prior to stressing of tendons in post-tensioned concrete and prior to removal of shores and forms from beams and structural slabs		X	☐	ACI 318: 26.11.2

Table 1705.3 – Concrete Construction (Cont.)	C	P	✓ if Req'd	Notes/Referenced Standards
L. Inspect formwork for shape, location, and dimensions of the concrete member being formed		X	☑	ACI 318: 26.10.1(b)
M. Material tests in absence of sufficient data or documentation	--	--	☐	CBC 1705.3.2

1705.4 – Masonry Construction (TMS 402/602-16)	C	P	✓ if Req'd	Notes/Referenced Standards
A. Prior to construction, verification of compliance of submittals	--	--	☐	This is the only inspection required for Level I
B. Prior to construction, verification of f'_m and f'_{AAC} except where specifically exempted by the Code	--	--	☐	
C. Prior to construction, Verification of slump flow and VSI as delivered to the site for self-consolidating grout	--	--	☐	
D. During construction, verification of f'_m and f'_{AAC} for every 5,000sf	--	--	☐	Level 3, Risk category IV only
E. During construction, verification of proportions of materials as delivered to the project site for premixed or preblended mortar, prestressing grout, and grout other than self consolidating grout.	--	--	☐	Level 3, Risk category IV only
F. As masonry construction begins, verify that the following are in compliance:				
1. Proportions of site-prepared mortar		X	☐	
2. Grade and size of prestressing tendons and anchorages		X	☐	
3. Grade, type and size of reinforcement, connectors, anchor bolts, and prestressing tendons and anchorage		X	☐	
4. Prestressing technique		X	☐	
5. Properties of thin-bed mortar for AAC masonry. Level 2 continuous for first 5000sf of AAC and periodic afterward. Level 3 continuous.	Level 2 and 3	X	☐	
6. Sample panel construction	Level 3	X	☐	
E. Prior to grouting verify that the following are in compliance:				
1. Grout space	Level 3	X	☐	

Table 1705.4 – Masonry Construction (TMS 602/ACI 530.1/ASCE 6) (Cont.)	C	P	✓ if Req'd	Notes/Referenced Standards
2. Placement of prestressing tendons and anchorages		X	☐	
3. Placement of reinforcement, connectors, and anchor bolts	Level 3	X	☐	
4. Proportions of site-prepared grout and prestressing grout for bonded tendons		X	☐	
F. Verify compliance of the following during construction:				
1. Materials and provedures with the approved submittals		X	☐	
2. Placement of masonry units and mortar joint construction		X	☐	
3. Size and location of structural members		X	☐	
4. Type, size, and location of anchors, including other details of anchorage of masonry to structural members, frames, or other construction	Level 3	X	☐	
5. Welding of reinforcement	X		☐	
6. Preparation, construction, and protection of masonry during cold weather <40°F or hot weather >90°F		X	☐	
7. Application and measurement of prestressing force	X		☐	
8. Placement of grout and prestressing grout for bonded tendons is in compliance	X		☐	
9. Placement of AAC masonry units and construction of thin-bed mortar joints. Level 2 continuous for first 5000sf of AAC and periodic afterward. Level 3 continuous.	Level 2 and 3	X	☐	
G. Observe preparation of grout specimens, mortar specimens, and/or prisms	Level 3		☐	
I. Vertical masonry foundation elements: Inspections shall be performed in accordance with Section 1705.4	--	--	☐	

1705.5 – Wood Construction	C	P	✓ if Req'd	Notes/Referenced Standards
A. Inspect prefabricated wood structural elements and assemblies in accordance with Section 1704.2.5	--	--	☐	
B. Inspect site built assemblies:				
1. High Load Diaphragms: Verify grade and thickness of structural panel and sheathing, framing members at adjoining edges, nails/staple diameter and length, number of fasteners in each line and at edge margins		X	☐	
2. Metal-plate-connected wood trusses spanning more than 60 feet: Verify that temporary installation restraint bracing and the permanent individual truss member restraint bracing are installed in accordance with the approved truss submittal package		X	☐	

Table 1705.6 – Verification and Inspection of Soils	C	P	✓ if Req'd	Notes/Referenced Standards
A. Verify materials below shallow foundations are adequate to achieve the design bearing capacity		X	☑	
B. Verify excavations are extended to proper depth and have reached proper material		X	☑	
C. Perform classification and testing of compacted fill materials		X	☑	
D. Verify use of proper materials, densities and lift thicknesses during placement and compaction of compacted fill	X		☑	
E. Prior to placement of compacted fill, observe subgrade and verify that site has been prepared properly		X	☑	

Table 1705.7 – Verification and Inspection of Driven Deep Foundation Elements	C	P	✓ if Req'd	Notes/Referenced Standards
A. Verify element materials, sizes and lengths comply with the requirements	X		☐	
B. Determine capacities of test elements and conduct additional load tests, as required	X		☐	
C. Observe driving operations and maintain complete and accurate records for each element	X		☐	
D. Verify placement locations and plumbness, confirm type and size of hammer, record number of blows per foot of penetration, determine required penetrations to achieve design capacity, record tip and butt elevations and document any damage to foundation element	X		☐	
E. For steel elements, perform additional inspections in accordance with Section 1705.2	--	--	☐	
F. For concrete elements and concrete-filled elements, perform additional inspections in accordance with Section 1705.3	--	--	☐	
G. For specialty elements, perform additional inspections as determined by the registered design professional in responsible charge	--	--	☐	

Table 1705.8 – Verification and Inspection of Cast-in-Place Deep Foundation Elements	C	P	✓ if Req'd	Notes/Referenced Standards
A. Inspect drilling operations and maintain complete and accurate records for each element	X		☐	
B. Verify placement locations and plumbness, confirm element diameters, bell diameters, lengths, embedment into bedrock and adequate end-bearing strata capacity; record concrete or grout volumes	X		☐	
C. For concrete elements, perform additional inspections in accordance with Section 1705.3	--	--	☐	

1705.9 – Helical Pile Foundations	C	P	✓ if Req'd	Notes/Referenced Standards
A. Continuous inspection is required during installation of helical pile foundations. Record installation equipment used, pile dimensions, tip elevations, final depth, final installation torque, and other pertinent data as required. The approved geotechnical report and construction documents shall be used to determine compliance	X		☐	

1705.11 – Verification and Inspection for Wind Resistance	C	P	✓ if Req'd	Notes/Referenced Standards
N/A in Sonoma County	N/A	N/A	N/A	N/A

1705.12 – Verification and Inspection for Seismic Resistance	C	P	✓ if Req'd	Notes/Referenced Standards
A. Structural Steel 1. Seismic force-resisting systems, 1705.12.1.1: Joint Details, Connection Details, Welding, Nondestructive Testing, High-strength Bolting, Composite Structures, Piling, etc.	See form CNI-033A Statement of Special Inspections Steel Appendix	Same as prev.	☐	CBC 1705.12.1, AISC 341: Chapter J Quality Control and Quality Assurance
2. Structural steel elements, 1705.12.1.2: Inspection of steel elements in the seismic force-resisting system not covered in 1705.12.1.1, including struts, collectors, chords, foundation elements, etc.	See form CNI-033A Statement of Special Inspections Steel Appendix	Same as prev.	☐	CBC 1705.12.1, AISC 341: Chapter J Quality Control and Quality Assurance
A. Structural Wood				CBC 1705.12.2
1. Inspection of field gluing operations of elements of the seismic-force-resisting system	X		☐	
2. Nailing, bolting, fastening, and other fastening of components within the seismic-force-resisting system, where the fastener spacing of the sheathing is 4 inches or less on center		X	☐	
B. Cold-formed Steel Light-Frame Construction:				CBC 1705.12.3

1705.12 – Verification and Inspection for Seismic Resistance (Cont.)	C	P	✓ if Req'd	Notes/Referenced Standards
1. Inspection during welding operations of elements of the seismic-force-resisting system		X	☐	
2. Screw attachment, bolting, anchoring and other fastening of components within the seismic-force-resisting system where the sheathing is wood structural panels or steel sheets with fastener spacing is 4 inches or less on center		X	☐	
C. Designated Seismic Systems: Inspect and verify that the component label, anchorage or mounting conforms to the certificate of compliance in accordance with Section 13.2.2 of ASCE 7		X	☐	CBC 1705.12.4, ASCE7 Ch. 13 Seismic Design Requirements for Nonstructural Components
D. Architectural Components: Erection and fastening of exterior cladding (more than 5 psf), interior (more than 15 psf) and exterior nonbearing walls, and interior and exterior veneer (more than 30 feet in height and more than 5 psf); anchorage of access floors		X	☐	CBC 1705.12.5
E. Plumbing, mechanical, and electrical components				CBC 1705.12.6
1. Anchorage of electrical equipment for emergency or standby power systems		X	☐	
2. Installation of anchorage of other electrical equipment		X	☐	
3. Installation of piping systems intended to carry flammable, combustible, or highly toxic contents and their associated mechanical units		X	☐	
4. Installation of HVAC ductwork that will contain hazardous materials		X	☐	
5. Installation of vibration isolation systems where the construction documents require a nominal clearance of ¼ inch or less between the equipment support frame and restraint		X	☐	
F. Storage Racks: Inspection is required during the anchorage of storage racks 8 feet or greater in height		X	☐	CBC 1704.12.7

1705.12 – Verification and Inspection for Seismic Resistance (Cont.)	C	P	✓ if Req'd	Notes/Referenced Standards
G. Seismic Isolation Systems: Fabrication and installation of isolator units and energy dissipation devices that are part of the seismic isolation system		X	☐	CBC 1705.12.8
H. Cold-formed steel special bolted moment frames		X	☐	CBC 1705.12.9

1705.13 – Testing and Qualification for Seismic Resistance	C	P	✓ if Req'd	Notes/Referenced Standards
A. Structural Steel: Nondestructive testing for Seismic force-resisting systems per 1705.1.1.1 and/or Structural steel elements per 1705.13.1.2	See form CNI-033A Statement of Special Inspections Steel Appendix	Same as prev.	☐	CBC 1705.13.1, AISC 341
B. Seismic Certification of Nonstructural Components: Review and acceptance of certificate of compliance by registered design professional with submittal of the review and certificate to the building official	--	--	☐	CBC 1705.13.2, AISC 13.2.1
C. Designated Seismic Systems: Review and acceptance of certificate of compliance by registered design professional with submittal of the review and certificate to the building official	--	--	☐	CBC 1705.13.3, Nonstructural Components AISC 13.2.2
D. Seismic Isolation Systems: Tested in accordance with Section 17.8 of ASCE7	--	--	☐	CBC 1705.13.4

1705.14 – Sprayed Fire-Resistant Materials	C	P	✓ if Req'd	Notes/Referenced Standards
A. Special inspections shall include the following physical and visual tests to demonstrate compliance with the listing and fire resistance rating				
1. Condition of substrates	--	--	☐	CBC 1705.14.2
2. Thickness of application	--	--	☐	CBC 1705.14.3, 1705.14.4, ASTM E605
3. Density in pounds per cubic foot	--	--	☐	ASTM E605
4. Bond strength adhesion/cohesion	--	--	☐	ASTM E736
5. Condition of finished application	--	--	☐	

1705.15 – Mastic and Intumescent Fire-Resistant Coatings	C	P	✓ if Req'd	Notes/Referenced Standards
A. Special inspection for mastic and intumescent fire resistive coatings applied to structural elements and decks	--	--	☐	AWCI 12-B

1705.16 – Exterior Insulation and Finish Systems (EIFS)	C	P	✓ if Req'd	Notes/Referenced Standards
A. Inspection required for all EIFS installations; Exceptions: EIFS installed over a water-resistive barrier with means of draining moisture to the exterior and EIFS installed over masonry or concrete	--	--	☐	
B. Special inspection of the water-resistive barrier coating when installed over a sheathing substrate	--	--	☐	ASTM E 2570

1705.17 – Fire-Resistant Penetrations and Joints	C	P	✓ if Req'd	Notes/Referenced Standards
A. Applicable to high-rise buildings or in buildings assigned to Risk Category III or IV				
1. Penetration firestops	--	--	☐	CBC 714.3.1.2, 714.4.2, 715.3, 715.4, 1705.17.1, 1705.17.2
2. Fire-resistant joint systems	--	--	☐	CBC 714.3.1.2, 714.4.2, 715.3, 715.4, 1705.17.1, 1705.17.2
3. Perimeter fire barrier systems	--	--	☐	CBC 714.3.1.2, 714.4.2, 715.3, 715.4, 1705.17.1, 1705.17.2

1705.18 – Testing Scope for Smoke Control Systems	C	P	✓ if Req'd	Notes/Referenced Standards
A. During erection of ductwork and prior to concealment for the purpose of leakage testing and recording of device location	--	--	☐	
B. Prior to occupancy and after sufficient completion for the purposes of pressure difference testing, flow measurements and detection and control verification	--	--	☐	

1706 – Design Strength of Materials	C	P	✓ if Req'd	Notes/Referenced Standards
A. Design strengths and permissible stresses of any structural material that are identified by a manufacturer's designation as to manufacture and grade by mill tests, or otherwise confirmed to the satisfaction of the building official, shall conform to the applicable specifications	--	--	☐	
B. Materials that are not specifically provided for in the applicable code shall justify design strengths and permissible stresses to the satisfaction of the building official	--	--	☐	

1707 – Alternate Test Procedure	C	P	✓ if Req'd	Notes/Referenced Standards
A. Alternate Test Procedure			☐	CBC 104.11, 1.8.7, CBC 1701.2

1708 – In-Situ Load Tests for Completed Construction	C	P	✓ if Req'd	Notes/Referenced Standards
A. Load Test Procedure Specified: An applicable load test procedure and acceptance criteria in CBC Chapter 35 Referenced Standards applies	X		☐	CBC 1708.2.1
B. Load Test Procedures Not Specified: The existing structure/construction is subjected to a test procedure developed by a registered design professional	X		☐	CBC 1708.2.2

1709 – Preconstruction Load Tests	C	P	✓ if Req'd	Notes/Referenced Standards
A. Load Test Procedure Specified: An applicable load test procedure and acceptance criteria in CBC Chapter 35 Referenced Standards applies	X		☐	CBC 1709.2
B. Load Test Procedures Not Specified: Proposed structure is subjected to a test procedure developed by a registered design professional	X		☐	CBC 1709.3
C. Wall and partition assemblies	--	--	☐	CBC 1709.4
D. Exterior window and door assemblies	--	--	☐	CBC 1709.5
E. Skylights and sloped glazing	--	--	☐	CBC 1709.6

CONTRACTOR RESPONSIBILITY

Per Section 1704.4, each contractor responsible for the construction of a main seismic-force-resisting system, designated seismic system or a seismic-resisting component listed in the Statement of Special Inspections shall submit a written statement of responsibility to the building official and the owner **prior to the commencement of work** on the system or component. The contractor's statement of responsibility shall contain acknowledgment of awareness of the special requirements contained in the Statement of Special Inspections.

Each contractor responsible for the construction of the applicable system or component as specified above shall use the following lines to enter their name, signature, company, license number, date, and particular system or component that they are taking responsibility for prior to commencement of work on the indicated system or component. A copy of this page shall be presented to the building official, and it is the contractor's responsibility to also provide the owner a copy of this document.

Name: _____

Signature: _____

Company: _____

License Number: _____

Date: _____

Exhibit 2: Permits

CLEAN WATER ACT SECTION 401 WATER QUALITY CERTIFICATION AND ORDER for:

Turkey Farm Culvert Replacement, Sonoma County

Sent via electronic mail: No hard copy to follow

Effective Date: February 14, 2025

RM 457356
Place ID 895325
WDID# 2 CW457356

Applicant: Gordenker Turkey Farm, Inc.
Attn: Sylvia Bernard
756 Donner Ave.
Sonoma, CA 95476
(707) 486-0036
sylviabernard@cs.com

Applicant's Agent: Clifton Environmental LLC
Attn: Estelle Clifton
PO Box 932
Redwood Valley, CA 95470
(707) 234-1978
estelle@cliftonenvironmental.net

Water Board: San Francisco Bay Regional Water Quality Control Board
Attn: Nicole Fairley
1515 Clay Street, Suite 1400
Oakland, CA 94612
(510) 622-2318
nicole.fairley@waterboards.ca.gov

Table of Contents

ORDER 1

I. Project 1

II. Impacts to Waters of the State 2

III. Mitigation 2

IV. California EcoAtlas 2

V. California Environmental Quality Act (CEQA) 3

VI. Conditions 3

General Conditions 3
Mitigation 5
Monitoring and Reporting 5
Administrative 8
General Compliance 9
Standard Conditions 10
Fees 10

Order

This Clean Water Act (CWA) section 401 Water Quality Certification and Order (Order) is issued at the request of Gordenker Turkey Farm, Inc., (Permittee) for the Turkey Farm Culvert Replacement (Project). We received the application for certification (Application) on June 18, 2024, and deemed the application complete after receiving supplemental information on January 7, 2025.

The Permittee has also applied to the U.S. Army Corps of Engineers (Corps), Regulatory Branch for coverage under Nationwide Permit 3 (Maintenance), pursuant to CWA Section 404 (33 USC 1344).

I. Project

The Project will improve a culvert crossing that conveys Trinity Creek (Creek) under an existing unsurfaced road at 103 Trinity Road in the town of Glen Ellen, Sonoma County (38.383854, -122.513374). The Creek is an intermittent tributary to Calabazas Creek in the Sonoma Creek watershed and is currently conveyed under the road through an aging and undersized 40-foot-long, 72-inch diameter corrugated metal pipe (CMP). In compliance with Sonoma County's permit requirements for the cannabis cultivation site located on this property, and the subsequent California Department of Fish and Wildlife's (CDFW's) Lake and Streambed Alteration Agreement (EPIMS-SON-17086-R3), the Permittee will replace the existing culvert with a larger, open-bottom aluminum arch culvert with a maximum width of 11.3 feet, height of 7.16 feet, and a shorter overall length of 36 linear feet (LF). The replacement culvert is adequately sized to convery 100-year storm flows and will be installed with a concrete headwall, footings, and wingwalls both upstream and downstream to accommodate the shorter culvert length.

The Creek is expected to be mostly dry during construction in late summer to early fall, though standing water may persist at an existing scour pool at the culvert outlet. If water is present in the project reach prior to construction, a qualified biologist will conduct aquatic species surveys and relocation, if needed, and the approved dewatering plan will be implemented. If dewatering is necessary, this will involve a temporary diversion and pipe systems to pump water out of the site to be discharged outside of the channel near an existing wetland that runs parallel to the stream for another 200 feet. Construction work is expected to take six weeks and will involve: (1) excavation and removal of the existing culvert; (2) installation of temporary falsework in preparation for the new culvert; (3) recontouring of the channel bed and banks to better conform with upstream and downstream conditions and improve fish passage; and (4) installation of concrete footings, the new aluminum arch culvert, and associated concrete headwalls and wingwalls. Project activities will require the use of heavy equipment such as a dozer and/or an excavator and will occur from the roadway to the extent feasible, but may require access into the channel in

accordance with the access map provided on September 9, 2024. Grading work will require the removal of up to 6 riparian trees, including 5 small native oaks and one Oregon ash. Disturbed areas will be restored and stabilized post-construction with erosion control measures and revegetation, including the installation 18 native tree plantings.

II. Impacts to Waters of the State

The Project will impact a total of 0.28 acres (130 LF) of the Creek, of which 0.001 acres (30 LF) of streambank will be permanently impacted through the installation of new concrete wing walls and 0.28 acres (100 LF) will be temporarily impact through grading disturbances and culvert fill removal and replacement. Within that footprint, the existing riparian canopy will be impacted through the unavoidable removal of up to 6 native riparian trees

During construction, ground-disturbing activities may impact water quality by increasing erosion and sedimentation and discharging debris and other waste materials.

III. Mitigation

During construction, the Permittee will avoid and minimize all impacts to waters of the State by implementing appropriate and effective best management practices (BMPs) as described in their Application.

The Project will restore 0.0107 acres (40 LF) of waters of the State by removing existing culvert fill from the channel bed, restoring natural bed and substrate conditions, and improving fish passage for listed steelhead populations to compensate for permanent impacts. The 0.28 acres (130 LF) of temporarily impacted stream and riparian habitat will be restored and enhanced by recontouring channel banks to natural conditions and stabilized with erosion control measures, such as biodegradable erosion control fabris and native seeding. The Project area will be revegetated through the installation of at least 18 native trees, including native oak species, along 80 LF of the stream. The tree plantings will provide a net ecological uplift to riparian habitat as compared to existing conditions by filling in riparian canopy losses that occurred from the Tubbs fire in 2017 as well as Project activities. In combination, these restoration and enhancement measure will adequately compensate for permanent and temporary impacts.

IV. California EcoAtlas

Regional, state, and national studies have determined that tracking of mitigation and restoration projects must be improved to better assess the performance of these projects, following monitoring periods that last several years. To effectively carry out the State’s Wetlands Conservation Policy of no net loss to wetlands, the State needs to closely track both losses and successes of mitigation and

restoration projects affecting wetlands and other waters of the State. The San Francisco Bay Regional Water Quality Board (Water Board) must also track project performance in Bay Area creeks subject to routine repair and maintenance activities, such as recurring instabilities. Therefore, we adopted the digital interactive mapping tool *EcoAtlas*.[1] *EcoAtlas* is a web-based tool that integrates maps, project plans, site conditions, restoration efforts, and other elements on a project-by-project basis based on data inputs. Accordingly, we require the Permittee to upload their Project information to *EcoAtlas* with the *Project Tracker* tool at https://ptrack.ecoatlas.org. The California Wetlands Monitoring Workgroup developed *EcoAtlas* and maintains detailed instructions for *Project Tracker* on its website at https://ptrack.ecoatlas.org/instructions.

V. California Environmental Quality Act (CEQA)

On January 26, 2021, the County of Sonoma, as lead agency, adopted a Mitigated Negative Declaration (State Clearinghouse (SCH) No. 2020120219) for the Project and filed a Notice of Determination (NOD) at the SCH on February 3, 2021. The Water Board, as a Responsible Agency under CEQA, has reviewed the Project CEQA documents and finds that the Project's significant environmental effects that are within the Water Board's purview and jurisdiction have been identified and will be mitigated to less-than-significant levels. Specifically, significant impacts pertaining to wetland and aquatic habitat and water quality will be mitigated to less-than-significant levels through the implementation of mitigation measures identified in the CEQA documents and the mitigation identified above, all of which are required to be implemented and reported on by this Order.

VI. Conditions

The Water Board independently reviewed the Project record to analyze impacts to water quality and the environment and designated beneficial uses within the Project's watershed. In accordance with this Order, the Permittee may proceed with the Project under the following terms and conditions. The conditions are necessary for the Water Board to find that the Project's discharge into the waters of the United States and the State is consistent with applicable law, and the Order could not be issued but for the inclusion of these conditions.

General Conditions

1. The Project shall be constructed in conformance with the Project description provided in the Application. The Permittee shall fully comply with engineering plans, specifications, and technical reports submitted in

[1] Source: California Wetlands Monitoring Workgroup (CWMW), 2019. *EcoAtlas*. Accessed May 14, 2019. https://www.ecoatlas.org. The California Wetland Monitoring Workgroup (CWMW) provides technical oversight on the development of content and functionality of EcoAtlas. As a member of CWMW, San Francisco Estuary Institute provides day-to-day support and management of EcoAtlas, and can be contacted by email at ptrackadmin@sfei.org.

the Application or required as part of this Order. **Any changes to information provided in the Application must be submitted to the Water Board and receive Executive Officer approval before the changes are implemented.**

Rationale: *This condition is necessary to ensure compliance with the permit and applicable conditions and to ensure that the proposed work and final restoration work has been conducted in accordance with the permit and all applicable conditions (California Water Code (CWC) Section 13264).*

2. To protect water in the creek and wetlands from sediment generation or debris associated with construction activity, construction in waters of the State is restricted to the dry season work window of April 15 through October 31.

Rationale: *This condition is necessary to ensure avoidance and minimization of impacts to waters of the State and associated Beneficial Uses from construction activities (CWC Section 13369(b)(1)(B) and (C); Water Quality Control Plan for the San Francisco Bay Basin (Basin Plan) Section 4.19).*

3. Disturbance or removal of vegetation shall be minimized. The site shall be stabilized through the incorporation of appropriate BMPs, including the successful reestablishment of native vegetation to enhance wildlife habitat values, and to prevent and control erosion.

Rationale: *This condition is necessary to ensure minimization of impacts to waters of the State and to ensure successful restoration of all temporary impacts authorized (State Board Resolution No. 68-16; 40 CFR Part 131.12 (a)(1); CWC Sections 13264 and 13369; Basin Plan Ch. 3 and 4).*

4. No equipment shall be operated in stream channels or other waters where there is flowing or standing water. Fueling, cleaning, or maintenance of vehicles or equipment during construction shall not take place within any areas where an accidental discharge to waters of the State may occur.

Rationale: *This condition is necessary to minimize adverse impacts to water quality from constructions activities to the maximum extent practicable (State Board Resolution No. 68-16; 40 CFR Part 131.12 (a)(1); CWC Section 13369; Basin Plan Section 2.1.14).*

5. No unauthorized construction-related materials or wastes shall be allowed to enter into or be placed where they may be washed by rainfall or runoff into waters of the State. When construction is completed, any excess material shall be removed from the work area and any areas adjacent to the work area where such material may be discharged to waters of the State.

Rationale: *This condition is necessary to ensure that contaminated material is not placed within waters of the State (Basin Plan Sections 3.3.12, 3.3.19, 4.19).*

Mitigation

6. To mitigate any temporary impacts to upland areas that could result in a discharge to waters of the State, the Permittee shall restore all disturbed areas.

7. Compensatory mitigation for permanent impacts shall be constructed within one year of authorized impacts. If restoration of temporary impacts to waters of the State is not completed within one year of the impacts, additional compensatory mitigation shall be required to offset the temporal loss of waters of the State.

8. To mitigate for 0.001 acres (30 LF) of permanent impacts and 0.28 acres (100 LF) of temporary impacts to the stream in accordance with application materials, the Permittee shall restore 0.0107 acres (40 LF) of waters of the State by removing existing culvert fill from the channel bed, restoring natural bed and substrate conditions, and improving fish passage for listed steelhead populations and enhance 0.28 acres of the riparian corridor by restoring temporarily impacted areas to pre-project conditions and installing at least 18 native trees, including native oak species, along 80 LF of the stream. The tree plantings will provide a net ecological uplift to riparian habitat as compared to existing conditions by filling in riparian canopy losses that occurred from the Tubbs fire in 2017 as well as project activities.

Rationale: *Conditions 6-8 are necessary to ensure protection of the mitigation areas for the unavoidable losses of functions and areas of waters of the State due to the construction of the proposed project (California Code of Regulations, Title 23 (23 CCR) Sections 3013 and 3861(d), Dredge or Fill Procedures Section IV.A.2(d) & B.4).*

Monitoring and Reporting

9. The Permittee shall input Project information to *EcoAtlas* within 14 days from the date of this Order, consistent with Finding **IV**. The Project information shall be added to the *Project Tracker* tool in *EcoAtlas* online at https://ptrack.ecoatlas.org. Instructions for adding information to *EcoAtlas* are available at https://ptrack.ecoatlas.org/instructions, or by contacting the San Francisco Estuary Institute by email at ptrackadmin@sfei.org, or the Water Board case manager listed on the cover page of this Order. The Executive Officer may grant an extension to the 14-day deadline if the Permittee submits a request in writing to the Water Board case manager listed on the cover page of this Order. The extension request may be submitted via email.

Rationale: *This condition is necessary to ensure compliance with the permit and applicable conditions (CWC Section 13267).*

10. The Permittee shall submit a Start of Construction Report at least seven days prior to start of initial ground disturbance activities. The Report shall reference **SOC_457356_Turkey Farm Culvert Replacement** and shall be sent via email to rb2-401reports@waterboards.ca.gov, or by mail to the attention of 401 Certifications Reports (see address on the letterhead).

Rationale: *This condition is necessary to assist in scheduling compliance inspections to ensure compliance with the permit and applicable conditions (CWC Section 13267).*

11. No later than 30 days after completing Project construction activities, the Permittee shall submit, acceptable to the Executive Officer, a Notice of Project Construction Completion. The Notice shall include the date Project construction activities (defined as construction of both the Project and any compensatory mitigation) were completed and reference **NOC_457356_Turkey Farm Culvert Replacement**. The Notice shall be sent via email to rb2-401reports@waterboards.ca.gov, or by mail to the attention of 401 Certifications Reports (see address on the letterhead).

12. To ensure that the Project and mitigation for impacts to waters of the State is performing as intended, the Permittee shall perform geomorphic monitoring for a minimum of 5 years and revegetation monitoring for a minimum of 10 years. This shall include annual inspections, data collection, and photo documentation of revegetation performance and geomorphic stability.

    Geomorphic monitoring shall consist of annual visual inspections and photo monitoring of any observed signs of erosion or sedimentation threatening the Project or aquatic habitat for 5 years. Photographs shall be taken at the same time each year at the culvert inlet & outlet and of any areas of observed erosion or instability, along with at least two photographs (one looking upstream, one looking downstream) taken every 25 feet for 100 feet upstream and downstream (or as far as access allows) to document channel conditions. The performance criterion shall be no observed signs of significant erosion or sedimentation threatening property, essential infrastructure, or aquatic habitat.

    Vegetation monitoring shall consist of photo monitoring and revegetation data collection, such as percent survival and percent cover of native vegetation and invasive species rated “high” by Cal-IPC. The annual performance criteria shall be the following:

    Year 1: At least 50 percent absolute vegetative cover; At least 85 percent survival of container tree plantings; and no more than 5 percent cover of invasive species rated “high” by Cal-IPC;

Year 2: At least 60 percent absolute vegetative cover; At least 80 percent survival of container tree plantings; and no more than 5 percent cover of invasive species rated “high” by Cal-IPC;

Year 3: At least 65 percent absolute vegetative cover; At least 75 percent survival of container tree plantings; and no more than 5 percent cover of invasive species rated “high” by Cal-IPC;

Year 4: At least 70 percent absolute vegetative cover; At least 75 percent survival of container tree plantings; and no more than 8 percent cover of invasive species rated “high” by Cal-IPC;

Year 5: At least 70 percent absolute vegetative cover; At least 75 percent survival of container tree plantings; and no more than 10 percent cover of invasive species rated “high” by Cal-IPC; and

Year 6, 8, & 10: At least 75 percent survival of planted oak trees, and no more than 10 percent cover of invasive species rated “high” by Cal-IPC.

Invasive plants shall be defined as those species rated "high" or included as "red alert" species by the California Invasive Plant Council and species rated "high priority" by the Bay Area Early Detection Network.

13. The Permittee shall submit annual monitoring reports, acceptable to the Executive Officer, by January 31 following each monitoring year with the first monitoring year commencing the calendar year after completing the Project. At the time of this Order, the Project completion is anticipated in 2025. Monitoring shall begin in 2026 and the first annual monitoring report shall be due on January 31, 2027, unless the Project is completed at a different time. Each annual report shall summarize each year’s monitoring results, including the need for, and implementation of, any remedial actions to help meet the performance criteria. The annual reports shall compare data to previous monitoring years and describe progress towards meeting final performance criteria.

14. Annual monitoring reports shall reference **AMR_457356_Turkey Farm Culvert Replacement** and shall be submitted via email to rb2-401reports@waterboards.ca.gov, or by mail to the attention of 401 Certifications Reports (see the address on the letterhead).

15. The final monitoring report shall document if the site meets the final performance criteria. If the final criteria are not met, the Permittee shall, in consultation with the appropriate agencies, identify remedial measures to be undertaken, including extending the monitoring and reporting period until the criteria are met. The Permittee shall implement all remedial

measures identified upon receiving written acceptance by the Executive Officer. Success of the mitigation program shall be determined by, and acceptable to, the Executive Officer.

16. Within 30 days of successfully establishing the Project's compensatory mitigation, the Permittee shall submit, acceptable to the Executive Officer, a Notice of Mitigation Monitoring Completion notifying the Water Board that mitigation has been completed. The Notice shall be submitted via email to rb2-401reports@waterboards.ca.gov, or by mail to the attention of 401 Certifications Reports. This notification shall include the date compensatory mitigation was completed, the Project Name, and reference **NMMC_457356_Turkey Farm Culvert Replacement**.

Rationale: *Conditions 11-16 are necessary to assist in scheduling compliance inspections, and to ensure compliance with the permit and applicable conditions to ensure that the proposed work and final restoration work has been conducted in accordance with the permit and all applicable conditions (23 CCR 23 Section 3013; CWC Section 13267).*

Administrative

17. The Permittee shall grant Water Board staff or an authorized representative, upon presentation of credentials and other documents as may be required by law, permission to: (1) enter upon the Project site or compensatory mitigation site(s) where a regulated facility or activity is located or conducted, or where records are kept; (2) have access to and copy any records that are kept and are relevant to the Project or the requirements of this Order; (3) inspect any facilities, equipment, practices, or operations regulated or required under this Order; and (4) sample or monitor for the purposes of assuring Order compliance.

Rationale: *This condition is necessary to assist in scheduling compliance inspections and to ensure compliance with the permit and applicable conditions (CWC Section 13267).*

18. A copy of this Order shall be provided to any consultants, contractors, and subcontractors working on the Project. Copies of this Order shall remain at the Project site for the duration of this Order. The Permittee shall be responsible for work conducted by its consultants, contractors, and any subcontractors.

Rationale: *This condition is necessary to ensure compliance with the permit and applicable conditions (CWC Sections 13170 and 13245).*

19. The Permittee shall provide a signed and dated notification to the Water Board of any change in ownership or interest in ownership of the Project area at least 10 days prior to the transfer of ownership. The purchaser shall also submit a written request to the Water Board to be named as the

permittee in an amended order. Until such time as this Order has been modified to name the purchaser as the permittee, the Permittee shall continue to be responsible for all requirements set forth in this Order.

Rationale: *This condition is necessary to ensure compliance with the permit and applicable conditions (CWC Section 13264).*

20. The Permittee may transfer responsibility for long-term management of compensatory mitigation after final performance criteria are met. The Permittee shall submit documentation to the Water Board if responsibility for long-term management of compensatory mitigation is legally transferred at least 30 days prior to the transfer of long-term management responsibility.

Rationale: *This condition is necessary to ensure compliance with the permit and applicable conditions (CWC Section 13264).*

21. The Permittee shall submit documentation to the Water Board if maintenance responsibility for post-construction BMPs is legally transferred at least 10 days prior to the transfer of BMP maintenance responsibility. The Permittee shall provide the transferee with a copy of a long-term BMP maintenance plan that complies with manufacturer or designer specifications.

Rationale: *This condition is necessary to ensure compliance with the permit and applicable conditions (CWC Section 13264).*

General Compliance

22. The Permittee shall notify the Water Board of any event causing a violation of compliance with water quality standards as soon as practicable (ideally within 24 hours). Notification may be via telephone, email, delivered written notice, or other verifiable means.

Rationale: *This condition is necessary to minimize adverse impacts to water quality (CWC Sections 13385 and 13267).*

23. Failure to implement the Project as proposed is a violation of this Order. Violation of this Order is a violation of state law and is subject to administrative civil liability pursuant to CWC Section 13350. Failure to meet any condition of this Order shall constitute a violation of the Porter-Cologne Water Quality Control Act and the Clean Water Act and may subject you to civil liability imposed by the Water Board to a maximum of $5,000 per day of violation or $10 for each gallon of waste discharged in violation of this Order.

Rationale: *This condition is necessary to minimize adverse impacts to water quality (CWC Sections 13267 and 13383).*

24. Any requirement for a report made as a condition of this Order is a formal requirement pursuant to CWC Section 13267, and failure to submit, late or inadequate submittal, or falsification of such technical report(s) is also subject to civil liability pursuant to CWC Section 13268. The burden, including costs, of providing the reports bears a reasonable relationship to the need for the reports and the benefits to be obtained from them.

25. In response to a suspected violation of any condition of this Order, the Water Board may require the Permittee to furnish, under penalty of perjury, any technical or monitoring reports the Water Board deems appropriate, provided that the burden, including costs, of the reports shall bear a reasonable relationship to the need for the reports and the benefits to be obtained from the reports.

Rationale: *This condition is necessary to minimize adverse impacts to water quality (CWC Sections 13267 and 13383).*

26. Should new information come to our attention that indicates a water quality problem with this Project, the Water Board may issue Waste Discharge Requirements pursuant to 23 CCR section 3857.

27. This Order shall continue to have full force and effect regardless of the expiration or revocation of any federal license or permit issued for the Project.

Rationale: *This condition is necessary to ensure compliance with the permit and applicable conditions (CWC Sections 13170 and 13245).*

Standard Conditions

28. This Order is subject to modification or revocation upon administrative or judicial review, including review and amendment pursuant to CWC Section 13330 and 23 CCR Section 3867.

29. This Order is not intended and shall not be construed to apply to any activity involving a hydroelectric facility and requiring a FERC license or an amendment to a FERC license unless the pertinent certification application was filed pursuant to 23 CCR Subsection 3855(b) and that application specifically identified that a FERC license or amendment to a FERC license for a hydroelectric facility was being sought.

Fees

30. In accordance with 23 CCR Section 2200, the Permittee shall pay an annual fee to the Water Board each fiscal year (July 1 – June 30) until Project construction activities are completed and an acceptable Notice of Project Construction Completion is received by the Water Board. If monitoring is required, the Permittee shall pay an annual fee to the Water Board until monitoring activities are completed and an acceptable Notice

of Mitigation Monitoring Completion is received by the Water Board. Annual fees will be automatically invoiced to the Permittee. **The Permittee must notify the Water Board at Project and mitigation completion with a final report in order to request to terminate annual invoicing. Notification should be sent to the staff listed at the bottom of this Order and to** rb2-401reports@waterboards.ca.gov. Water Board staff will verify conditions of the Order have been met and may request a site visit at that time to confirm the Project's status and compliance with this Order.

31. This Order is conditioned upon total payment of the full fees, including annual fees, required in State regulations (23 CCR Sections 2200(a)(3) and 3833(b)(3)) and owed by the Permittee. The Application fee for this Project, $7,450, was paid in full on August 26, 2024, and was calculated as Category A – *Fill & Excavation Discharges* with the dredge and fill fee calculator.

I, Eileen White, Executive Officer, do hereby issue this Order certifying that any discharge from the proposed Project will comply with the applicable provisions of CWA sections 301 (Effluent Limitations), 302 (Water Quality Related Effluent Limitations), 303 (Water Quality Standards and Implementation Plans), 306 (National Standards of Performance), and 307 (Toxic and Pretreatment Effluent Standards), and with other applicable requirements of State law. This discharge is also regulated under State Water Resources Control Board Order No. 2003-0017-DWQ, "General Waste Discharge Requirements for Dredge and Fill Discharges That Have Received State Water Quality Certification," which requires compliance with all conditions of this Order.

If you have any questions concerning this Order, please contact Nicole Fairley of my staff at (510) 622-2424 or nicole.fairley@waterboards.ca.gov.

Sincerely,

Digitally signed by Keith H. Lichten, Division Manager
Date: 2025.02.14 12:00:32 -08'00'

Water Boards

for Eileen M. White, P.E.
Executive Officer

cc: SWRCB, DWQ, stateboard401@waterboards.ca.gov
Water Board, Victor Aelion, victor.aelion@waterboards.ca.gov
U.S. EPA, Region IX:
Regulatory Inbox, r9cwa401@epa.gov
Jennifer Siu, siu.jennifer@epa.gov
U.S. Army Corps of Engineers, SF Regulatory:
Regulatory Inbox, cespn-rg-info@usace.army.mil
Amberly Bark, amberly.p.bark@usace.army.mil
CDFW, Emily Galli, emily.galli@wildlife.ca.gov
Clifton Environmental, Inc., Jun Takeda, jun@cliftonenvironmental.net

State of California – Natural Resources Agency
DEPARTMENT OF FISH AND WILDLIFE
Bay Delta Region
2825 Cordelia Road, Suite 100
Fairfield, CA 94534
(707) 428-2002
www.wildlife.ca.gov

GAVIN NEWSOM, Governor
CHARLTON H. BONHAM, Director

Erich Pearson
WWCMC, LLC
PO Box 1538
Glen Ellen, CA 95476

Dear Mr. Pearson:

Final Lake or Streambed Alteration Agreement, EPIMS Notification No. SON-17086, Unnamed Tributary to Calabazas Creek; 60 Inch Culvert Crossing

Enclosed is the final "Streambed" Alteration Agreement (Agreement) for the 60 Inch Culvert (Project). Before the California Department of Fish and Wildlife (CDFW) may issue an Agreement, it must comply with the California Environmental Quality Act (CEQA). In this case, CDFW acting as a responsible agency filed a Notice of Determination (NOD) within five working days of signing the Agreement. The NOD was based on information contained in the Initial Study/Mitigated Negative Declaration prepared by the lead agency.

Under CEQA, the filing of an NOD triggers a 30-day statute of limitations period during which an interested party may challenge the filing agency's approval of the Project. You may begin the Project before the statute of limitations expires if you have obtained all necessary local, state, and federal permits or other authorizations. However, if you elect to do so, it will be at your own risk.

If you have any questions regarding this letter, please contact Mia Bianchi, Environmental Scientist at (707) 210-4531 or by email at mia.bianchi@wildlife.ca.gov.

CALIFORNIA DEPARTMENT OF FISH AND WILDLIFE
BAY DELTA REGION
2825 CORDELIA ROAD, SUITE 100
FAIRFIELD, CA 94534

STREAMBED ALTERATION AGREEMENT
EPIMS NOTIFICATION NO. SON-17086-R3
Unnamed tributary to Calabazas Creek

ERICH PEARSON
60-INCH CULVERT CROSSING

This Streambed Alteration Agreement (Agreement) is entered into between the California Department of Fish and Wildlife (CDFW) and Erich Pearson (Permittee).

RECITALS

WHEREAS, pursuant to Fish and Game Code section 1602, Permittee notified CDFW on March 10, 2020 that Permittee intends to complete the project described herein.

WHEREAS, pursuant to Fish and Game Code section 1603, CDFW has determined that the project could substantially adversely affect existing fish or wildlife resources and has included measures in the Agreement necessary to protect those resources.

WHEREAS, Permittee has reviewed the Agreement and accepts its terms and conditions, including the measures to protect fish and wildlife resources.

NOW THEREFORE, Permittee agrees to complete the project in accordance with the Agreement.

PROJECT LOCATION

The Project is located at an unnamed tributary to Calabazas Creek, in the County of Sonoma, State of California; Latitude 38.38394, Longitude -122.51341; 103 Trinity Road, Glen Ellen, CA, Assessor's Parcel Number [053-100-015].

PROJECT DESCRIPTION

The Project relates to cannabis cultivation occurring in both mixed-light greenhouses and an indoor nursery facility.

This Agreement covers the following project activities: 1) installation of a new septic line within the fill prism of a stream crossing used to access cannabis cultivation areas, and 2) replacement/upgrade of the culverted stream crossing used for cannabis cultivation access with a bridge design.

The Project involves installing a new pressurized septic distribution line over the top of the culvert but buried beneath the roadway. A 2-inch diameter septic line will be run along the new roadbed that will be paved. The minimum depth between the top of the culvert and the septic line is 6 inches. The minimum depth between the roadbed and septic line is 12". The Septic line installation will occur prior to stream crossing upgrades. Septic line placement would be in the same location after crossing work is completed.

An existing 60-inch stream crossing culvert over an unnamed watercourse is undersized and will be upgraded based on a bridge design that allows passage of 100-year stream flow and does not impede fish or aquatic life passage up or downstream. Stream crossing construction plans will be provided to CDFW per Measure 2.11.

Any proposed fill around the stream crossing would be derived from clean sand bedding and native rock material excavated from the footings of the former stream crossing culvert.

PROJECT IMPACTS

Existing fish or wildlife resources the project could substantially adversely affect include:

California freshwater shrimp	*Syncaris pacifica*	FE, SE
red-bellied newt	*Taricha rivularis*	SSC
foothill yellow-legged frog	*Rana boylii*	SSC
California giant salamander	*Dicamptodon ensatus*	SSC
pallid bat	*Antrozous pallidus*	SSC
Central California Coast DPS steelhead	*Oncorhynchus mykiss*	FT
common aquatic and terrestrial species		
nesting birds		

SE = State Endangered; ST = State Threatened; SFP = State Fully Protected; SSC = State Species of Special Concern; FE = Federally Endangered; FT = Federally Threatened

The adverse effects the project could have on the fish or wildlife resources identified above include:

- Alteration of streamflow regime;

- Change in stream hydrology, depth and/or flow velocity;
- Disturbance from project activity;
- Disruption to nesting birds and other wildlife;
- Depositing sediments into watercourses from stream crossing work;
- Addition of deleterious materials to stream channel(s);
- Prevention of fish passage.

MEASURES TO PROTECT FISH AND WILDLIFE RESOURCES

1. Administrative Measures

Permittee shall meet each administrative requirement described below.

1.1 Documentation at Project Site. Permittee shall make the Agreement, any extensions and amendments to the Agreement, and all related notification materials and California Environmental Quality Act (CEQA) documents, readily available at the project site at all times and shall be presented to CDFW personnel, or personnel from another state, federal, or local agency upon request.

1.2 Providing Agreement to Persons at Project Site. Permittee shall provide copies of the Agreement and any extensions and amendments to the Agreement to all persons who will be working on the project at the project site on behalf of Permittee, including but not limited to contractors, subcontractors, inspectors, and monitors.

1.3 Notification of Conflicting Provisions. Permittee shall notify CDFW if Permittee determines or learns that a provision in the Agreement might conflict with a provision imposed on the project by another local, state, or federal agency. In that event, CDFW shall contact Permittee to resolve any conflict.

1.4 Project Site Entry. Permittee agrees that CDFW personnel may enter the project site at any time to verify compliance with the Agreement.

1.5 Notify CDFW Prior to Work. The Permittee shall notify CDFW by email at least five working days prior to commencement of covered activities. See contact information below.

1.6 No Trespass. To the extent that any provisions of this Agreement provide for activities that require the Permittee to traverse another owner's property, such provisions are agreed to with the understanding that the Permittee possesses the legal right to so traverse. In the absence of such right, any such provision is void.

2. Avoidance and Minimization Measures

To avoid or minimize adverse impacts to fish and wildlife resources identified above, Permittee shall implement each measure listed below.

2.1 Work Period. All septic line and stream crossing work shall begin on or after June 15 and shall be completed by October 15. Revegetation work is not limited to this work window but must be completed within the same season as project activities.

2.2 Conduct Work During Daylight Hours. Work is restricted to daylight hours (one hour after sunrise to sunset).

2.3 Work Period in Dry Weather Only. Project work shall be restricted to dry weather as allowed during the work period specified in Measure 2.1. Construction shall be timed with awareness of precipitation forecasts and potential increases in stream flow. Construction activities shall cease when the National Weather Service (NWS) 72-hour weather forecast indicates a 30 percent chance or higher of precipitation. All necessary erosion control measures shall be implemented prior to the onset of precipitation. Construction equipment and materials shall be removed if inundation is likely. Construction activities halted due to precipitation may resume when precipitation ceases, and the NWS 72-hour weather forecast indicates less than a 30 percent chance of precipitation. No work shall occur during a dry-out period of 24 hours after the above referenced wet weather. Weather forecasts shall be documented upon request by CDFW.

2.4 Work Period Modification. If Permittee needs more time to complete the project activity, work may be extended on a weekly basis by CDFW up until October 31st. Permittee shall submit a request for a work period variance by contacting Mia Bianchi, Environmental Scientist at mia.bianchi@wildlife.ca.gov. Refer to EPIMS-SON-17086 when notifying CDFW. Permittee shall submit a written request for a work period variance to CDFW. The work period variance request shall: 1) describe the extent of work already completed; 2) detail the activities that remain to be completed; 3) provide a National Weather Service forecast covering the time to need to complete a phase or activity; 4) detail the time required to complete each of the remaining activities; 5) include a description of stream conditions; and 6) provide photographs of both the current work completed and the proposed site for continued work. The work period variance request should consider the effects of increased stream flows, rain delays, increased erosion control measures, limited access due to saturated soil conditions, and limited growth of erosion control grasses due to cool weather. Work period variances are issued at the discretion of CDFW. CDFW will review the written request to work outside of the established work period. CDFW reserves the right to require additional measures to protect fish and wildlife resources as a condition for granting the variance

2.5 Wildlife Movement. Project activity infrastructure shall not prevent, impede, or tend to prevent or impede the passing of fish up- and downstream, in compliance with Fish and Game Code Section 5901.

Septic Line Work

2.6 Septic Line Work Limitations. Septic line installation work shall be limited to above top of streambank. No septic line work shall occur in the stream channel.

2.7 Deleterious Materials. Deleterious materials shall be prevented from falling into the watercourse below septic line installation work. Permittee shall provide a deleterious materials control plan describing how materials will be prevented from entering the stream. The Plan shall be emailed to Mia Bianchi, Environmental Scientist, at mia.bianchi@wildlife.ca.gov 2 weeks before start of septic line work.

2.8 Septic Line Re-establishment. Septic Line shall be disconnected prior to stream crossing work. Once stream crossing replacement work completed, Permittee may re-establish septic line per original placement.

Bridge Design and Maintenance

2.9 Bridge Design Plans. Permittee shall submit a final Bridge Design Plan prepared and approved by a Qualified Professional for replacing the 60-inch cannabis access road culvert with a bridge. The Bridge Design Plan shall meet up and downstream passage for all life-stages of the aquatic species listed in the impacts section of this Agreement above. Final plans shall be submitted to Mia Bianchi via email for review and acceptance at mia.bianchi@wildlife.ca.gov by March 30, 2022.

2.10 Culvert Replaced with Bridge. Permittee shall replace the onsite stream crossing project culvert with a bridge by October 15, 2022. The replacement due date may be extended for up to one year (October 15, 2023) at the discretion of CDFW staff.

2.11 Bridge Design Plan - Components. At minimum, the following bridge design considerations shall be incorporated into the submitted Bridge Design Plans:

- Hydraulic sizing calculations: CDFW requests that bridges be sized to pass the 100-year flood flow,
    - Bridge shall be designed with considerations to bedload and debris and without constricting natural stream flow;
- Bridge abutments/footings shall be located outside the stream banks and above ordinary high water.
- Design drawings showing site topography, control points, dimensions of bridge structure in plan, elevation, longitudinal profile, and cross-sectional views, and important component details.

- Details including all identified quantities of stabilization materials (if applicable), including rock slope protection (RSP), natural soil material, etc;
    - If RSP is incorporated, rocks shall be of such shape as to form a stable protection structure of the required section. Rounded boulders or cobbles shall not be used on prepared ground surfaces having slopes steeper than 2 to 1. Angular shapes may be used on any planned slope. Flat or needle shapes shall not be accepted unless the thickness of the individual pieces is greater than 1/3 the length.
    - Only clean material such as, RSP that is free of trash, debris and deleterious material shall be used as bank stabilization. Asphalt shall not be considered an acceptable material.
- Design shall be passable to fish as required under Fish and Game Code section 5901.

2.12 Clean Rocks/ Gravel. Only clean rocks and/or gravel shall be used for the project.

2.13 Stream Crossing Backfill Material. Backfill material shall be free of rocks, limbs or other debris that could dent any installed pipe or allow water to seep around the pipe.

2.14 Bridge Shall be Kept Open. Permanent bridge shall be maintained and kept open year-round. Permittee is responsible for maintaining free-flowing conditions under the bridge and clearing of all debris. Substantial changes to the bed, channel or bank necessary for maintenance may require separate notification under Fish and Game Code section 1602 (a).

2.15 Adequately Sized Materials. Stabilization materials shall be adequately sized to withstand peak storm flows for the drainage. Material shall be properly aligned within the stream and otherwise engineered, installed and maintained, to assure resistance to washout, and erosion of the streambed, stream banks and/or fill.

Temporary Worksite Diversion

2.16 Dewatering Plan. If water is present in the stream(s) during the work window prior to stream crossing work, the Permittee shall submit a dewatering plan to CDFW for approval. The plan shall include step by step plan of dewater procedures, all materials required, and a justification for the rate of pumping necessary. This plan should be sent via email to Mia Bianchi at mia.bianchi@wildlife.ca.gov at least 2 weeks prior to anticipated start of stream work.

2.17 Screened Intake of Dewatering. Each Project point of diversion for the purpose of dewatering shall be screened to prevent fish and wildlife entrainment. The screen shall:

- Have either round slots/openings not exceeding 3/32-inch diameter;

square openings not exceeding 3/32-inch, measured diagonally; or slotted openings not exceeding 0.069 inch in width.
- Have slots/openings evenly distributed on the screen area. Material may be perforated, woven, or slotted material that is corrosion-resistant, such as stainless steel, and not harmful to wildlife.
- Be tightly secured to the water intake line or supporting structure

2.18 Authorization. This Agreement does not authorize diversion of streamflow.

Fish, Wildlife and Plant Prevention and Protection

2.19 Unauthorized Take. The Permittee is required to comply with all applicable State and Federal laws, including the California Endangered Species Act (CESA) and Federal Endangered Species Act. This Agreement does not authorize the take of any State or Federal endangered or threatened species. Liability for any take or incidental take of such listed species remains the responsibility of the Permittee for the duration of the Project. Any unauthorized take of such listed species may result in prosecution and nullification of the Agreement.

2.20 Biological Monitor On-Site for Septic Line Installation. A Biological Monitor shall be present at all times during septic line installation work.

- A biological monitor is an individual who shall have academic and professional experience in biological sciences and related resource management activities as it pertains to this project, experience with construction-level biological monitoring, be able to recognize species that may be present within the project area, and be familiar with the habits and behavior of those species.

2.21 Resume Review. Permittee shall submit to CDFW for written approval, the name and resume of a Qualified Biologist involved in conducting surveys and/or monitoring work. A Qualified Biologist is an individual who shall have a minimum of five years of academic training and professional experience in biological sciences and related resource management activities with a minimum of two years conducting surveys for each species that may be present within the project area. Resumes shall be emailed to Mia Bianchi, Environmental Scientist, at mia.bianchi@wildlife.ca.gov two weeks prior to start of bridge work.

2.22 Qualified Biologist On-Site for Bridge Replacement. A Qualified Biologist shall be on-site daily to monitor bridge replacement work to ensure compliance with all conditions of this Agreement. The work area shall be inspected daily by a Qualified Biologist before work begins and during construction each day. If special status species, such as foothill yellow-legged frog, red-bellied newt, California giant salamander, California red-legged frog, and pallid bat are encountered during project construction activities, work shall be suspended and CDFW immediately

notified. Presence of special status species, including California red-legged frog, may require a CESA Incidental Take Permit (ITP) before project activities may commence. The qualified biologist shall have the authority to halt project activities in order to comply with the terms of this Agreement and otherwise avoid impacts to species and or habitats.

2.23 Exclusion Fencing. Permittee shall install exclusion fencing around the perimeter of the stream crossing work area to exclude foothill yellow-legged frog, California red-legged frog, red-bellied newt, and California giant salamander. The permittee shall submit exclusion fencing plans that depicts the type of fencing used, fencing dimensions, and location. Permittee shall submit plans 30 days prior to start of stream crossing work.

2.24 Special Status Species Encountered During Work. If CDFW determines or Permittee finds that any special-status species are present at the project area, Permittee shall stop all Project work and Permittee, or the qualified biologist shall notify CDFW and other agencies such as the USFWS as may be appropriate. If there is imminent danger of injury to special-status species from project related activities, and the special-status species individual(s) do not move out of the work area on their own, the qualified biologist shall contact the appropriate agency. Through consultation with CDFW, additional measures may be developed to protect special-status species.

2.25 Demarcate Project Activity Boundaries. Permittee shall use temporary construction fencing to identify the agreed limits of disturbance within the channel(s) and riparian area(s): 1) prior to septic line work, and 2) on either side of the culvert crossings prior to stream crossing work. Construction staff shall stay within the marked boundaries to limit impacts to the greatest extent possible. Temporary fences, barriers, and/or flagging shall be completely removed from the project site and properly disposed of upon completion of project activities.

2.26 Check Culvert Prior to Work. The Qualified Biologist(s) shall check the culvert prior to replacement work for presence of wildlife species, including special-status bats. In the event that special status species are observed within existing culvert, Permittee and/or Qualified Biologist shall stop all stream crossing Project work and shall notify CDFW and other agencies as appropriate.

2.27 Nesting Bird Surveys. If construction, grading, vegetation removal, or other project-related improvements are scheduled during the nesting season of protected raptors and migratory birds January 15 to September 1, a focused survey for active nests of such birds shall be conducted by a qualified biologist within 7 days prior to the beginning of project-related activities. The results of the survey shall be sent to Mia Bianchi, Environmental Scientist, by email (mia.bianchi@wildlife.ca.gov) prior to the start of project activities. Refer to EPIMS-SON-17086-R3 when submitting the survey to CDFW. If an active nest is found, Permittee shall consult with the

United States Fish and Wildlife Service (USFWS) and CDFW regarding appropriate action to comply with the Migratory Bird Treaty Act of 1918 and Fish and Game Code. If a lapse in project-related work of 7 days or longer occurs, another focused survey and if required, consultation with CDFW and USFWS, shall be required before project work can be reinitiated.

2.28 Active Nest Buffers. If an active nest is found during surveys, Permittee or the qualified biologist shall consult with CDFW and USFWS regarding appropriate action to comply with State and federal laws. Active nest sites shall be designated as "Ecologically Sensitive Areas" (ESA) and protected (while occupied) during project work by demarking a "No Work Zone" around each nest site.

- Buffer distances for bird nests should be site specific and an appropriate distance, as determined by a qualified biologist. The buffer distances should be specified to protect the bird's normal bird behavior to prevent nesting failure or abandonment. The buffer distance recommendation should be developed after field investigations that evaluate the bird(s) apparent distress in the presence of people or equipment at various distances. Abnormal nesting behaviors which may cause reproductive harm include, but are not limited to, defensive flights/vocalizations directed towards project personnel, standing up from a brooding position, and flying away from the nest. The qualified biologist shall have authority to order the cessation of all nearby project activities if the nesting birds exhibit abnormal behavior which may cause reproductive failure (nest abandonment and loss of eggs and/or young) until an appropriate buffer is established.

- Typical protective buffers between each identified nest site and the construction site are as follows: i) 1,000 feet for large raptors such as buteos; ii) 500 feet for small raptors; and iii) 250 feet for passerines. The qualified biologist shall monitor the behavior of the birds (adults and young, when present) at the nest site to ensure that they are not disturbed by project work. Nest monitoring shall continue during project work until the young have fully fledged (have completely left the nest site and are no longer being fed by the parents), as determined by the qualified biologist.

Vegetation Protection and Prevention

2.29 Vegetation Removal. Disturbance or removal of vegetation during septic line/stream crossing work shall be kept to the minimum necessary to complete project related activities. Precautions shall be taken to avoid other damage to vegetation by people or equipment.

2.30 Treat Exposed Areas. All exposed/disturbed areas and access points within the stream zone left barren of vegetation as a result of the construction activities shall be restored by seeding with a blend of native erosion control grass seed approved

in writing by CDFW staff. Seeded areas shall be mulched. Revegetation shall be completed as soon as possible after construction activities in those areas cease. Seeding placed after October 15 must be covered with broadcast straw, jute netting, coconut fiber blanket or similar erosion control blanket. Please see Measure 2.31 for further instruction.

2.31 Native Grass Seeding. Permittee shall place erosion protection in areas where vegetation cannot reasonably be expected to become re-established. If Project construction results in temporary impacts to riparian habitat, all other areas of disturbed soil which drain toward State waters shall be planted with propagules (seeds, cuttings and/or divisions) of locally-collected native plants. Local native grass species include, but are not limited to, meadow barley (*Hordeum brachyantherum ssp. Californicum*), blue wildrye (*Elymus glucus*), California brome (*Bromus carinatus*), creeping wildrye (*Elymus triticoides*), California oatgrass (*Danthonia californica*) and California melic (*Melica californica*). Locally native wildflower and/or shrub seeds may also be included in the seed mix.

2.32 Control Invasive Species. Permittee is responsible for monitoring and, if needed, eradication of invasive exotic species that may occur within the project area for a minimum of two years following construction.

Erosion and Sediment Control

2.33 Erosion Control. Erosion control measures shall be utilized throughout all phases of operation where sediment runoff from exposed slopes threatens to enter waters of the State. At no time shall silt-laden runoff be allowed to enter the stream or directed to where it may enter the stream. Silt control structures shall be monitored for effectiveness and shall be repaired or replaced as needed.

2.34 Prohibition Against Use of Plastic Netting in Erosion Control Measures. Permittee shall not use temporary or permanent erosions control devices containing plastic netting, including photo- or bio-degradable plastic netting. Erosion control and landscaping specifications shall only allow only natural fiber for use in erosion control mats, blankets, and straw or fiber wattles.

Toxic and Hazardous Materials

2.35 Toxic Materials. Any hazardous or toxic materials that could be deleterious to aquatic life that could be washed into the stream or its tributaries shall be contained in watertight containers or removed from the project site.

2.36 Hazardous Materials. Debris, soil, silt, bark, slash, sawdust, rubbish, creosote-treated wood, raw cement/concrete or washings thereof, asphalt, paint or other coating material, oil or other petroleum products, or any other substances which could be hazardous to aquatic life, wildlife, or riparian habitat resulting from the

project related activities shall be prevented from contaminating the soil and/or entering the Waters of the State.

Spills and Emergencies

2.37 Spill Kits. Prior to entering the work site, all field personnel shall know the location of spill kits and trained in their appropriate use.

2.38 Spill of Material Deleterious to Fish and Wildlife. In the event of a hazardous materials spill into a stream (e.g., concrete or bentonite), Permittee shall immediately notify the California Office of Emergency Services State Warning Center by calling 1-800-852-7550 and immediately provide written notification to CDFW by email at R31600Program@wildlife.ca.gov. Permittee shall take all reasonable measures to document the extent of the impacts and affected areas including photographic documentation of affected areas, injured fish and wildlife. The Permittee shall be responsible for all spill clean-up, site remediation and compensatory mitigation costs.

2.39 Spill Catchment. All activities performed in or near a river, stream, or lake shall have absorbent materials designated for spill containment and cleanup activities on-site for use in an accidental spill. The Permittee shall immediately notify the California Emergency Management Agency at 1-800-852-7550 and immediately initiate the cleanup activities. CDFW shall be notified by the Permittee and consulted regarding clean-up procedures.

3. Reporting Measures

Permittee shall meet each reporting requirement described below.

3.1 Photographic Documentation of Work. Prior to commencement of work a minimum of four (4) vantage points that offer representative views of the project site and work areas shall be identified. The Permittee shall photograph the project area from each of the vantage points, noting the direction and magnification of each photo. Upon completion of work, the Permittee shall photograph post-project conditions from the vantage points using the same direction and magnification as pre-project photos. A reference key shall be submitted with the photos describing the location of the photo, the direction of the view, and whether the photo is pre- or post-construction. All photos shall be submitted 1) within 60 days of septic line installation conclusion, and 2) within 60 days of bridge work and septic line re-establishment conclusion. Notification shall be submitted via email to Mia Bianchi at mia.bianchi@wildlife.ca.gov.

3.2 Notification to the California Natural Diversity Database. If any listed, rare, or special status species are detected during project surveys on or around the project site during project activities, the Permittee shall submit CNDDB Field

Survey Forms to CDFW in the manner described at the CNDDB website (http://www.dfg.ca.gov/biogeodata/cnddb/submitting_data_to_cnddb.asp) within five working days of the sightings. Copies of such submittals shall also be submitted to the CDFW regional office as specified below.

3.3 Survey Reports. All survey report results (i.e. nesting bird surveys) shall be submitted to Mia Bianchi at mia.bianchi@wildlife.ca.gov up to 7 days after survey completion.

CONTACT INFORMATION

Any communication that Permittee or CDFW submits to the other shall be in writing and any communication or documentation shall be delivered to the address below by U.S. mail or email, or to such other address as Permittee or CDFW specifies by written notice to the other.

To Permittee:

Erich Pearson
WWCMC, LLC.
P.O. Box 1538
Glen Ellen, CA 95476
epearsonsf@gmail.com

To CDFW:

California Department of Fish and Wildlife
Bay Delta Region
2825 Cordelia Road, Fairfield CA 94534
Attn: Lake and Streambed Alteration Program – Mia Bianchi
EPIMS Notification #17086-R3
epims.r3@wildlife.ca.gov

LIABILITY

Permittee shall be solely liable for any violations of the Agreement, whether committed by Permittee or any person acting on behalf of Permittee, including its officers, employees, representatives, agents or contractors and subcontractors, to complete the project or any activity related to it that the Agreement authorizes.

This Agreement does not constitute CDFW's endorsement of or require Permittee to proceed with the project. The decision to proceed with the project is Permittee's alone.

SUSPENSION AND REVOCATION

CDFW may suspend or revoke in its entirety the Agreement if it determines that Permittee or any person acting on behalf of Permittee, including its officers, employees, representatives, agents, or contractors and subcontractors, is not in compliance with the Agreement.

Before CDFW suspends or revokes the Agreement, it shall provide Permittee written notice by certified or registered mail that it intends to suspend or revoke. The notice shall state the reason(s) for the proposed suspension or revocation, provide Permittee an opportunity to correct any deficiency before CDFW suspends or revokes the Agreement, and include instructions to Permittee, if necessary, including but not limited to a directive to immediately cease the specific activity or activities that caused CDFW to issue the notice.

ENFORCEMENT

Nothing in the Agreement precludes CDFW from pursuing an enforcement action against Permittee instead of, or in addition to, suspending or revoking the Agreement.

Nothing in the Agreement limits or otherwise affects CDFW's enforcement authority or that of its enforcement personnel.

OTHER LEGAL OBLIGATIONS

This Agreement does not relieve Permittee or any person acting on behalf of Permittee, including its officers, employees, representatives, agents, or contractors and subcontractors, from complying with, or obtaining any other permits or authorizations that might be required under, other federal, state, or local laws or regulations before beginning the project or an activity related to it. For example, if the project causes take of a species listed as threatened or endangered under the Endangered Species Act (ESA), such take will be unlawful under the ESA absent a permit or other form of authorization from the U.S. Fish and Wildlife Service or National Marine Fisheries Service.

This Agreement does not relieve Permittee or any person acting on behalf of Permittee, including its officers, employees, representatives, agents, or contractors and subcontractors, from complying with other applicable statutes in the Fish and Game Code including, but not limited to, Fish and Game Code sections 2050 *et seq*. (threatened and endangered species), section 3503 (bird nests and eggs), section 3503.5 (birds of prey), section 5650 (water pollution), section 5652 (refuse disposal into water), section 5901 (fish passage), section 5937 (sufficient water for fish), and section 5948 (obstruction of stream).

Nothing in the Agreement authorizes Permittee or any person acting on behalf of Permittee, including its officers, employees, representatives, agents, or contractors and subcontractors, to trespass.

AMENDMENT

CDFW may amend the Agreement at any time during its term if CDFW determines the amendment is necessary to protect an existing fish or wildlife resource.
Permittee may amend the Agreement at any time during its term, provided the amendment is mutually agreed to in writing by CDFW and Permittee. To request an amendment, Permittee shall submit to CDFW a completed CDFW "Request to Amend Lake or Streambed Alteration" form and include with the completed form payment of the corresponding amendment fee identified in CDFW's current fee schedule (see Cal. Code Regs., tit. 14, § 699.5).

TRANSFER AND ASSIGNMENT

This Agreement may not be transferred or assigned to another entity, and any purported transfer or assignment of the Agreement to another entity shall not be valid or effective, unless the transfer or assignment is requested by Permittee in writing, as specified below, and thereafter CDFW approves the transfer or assignment in writing.

The transfer or assignment of the Agreement to another entity shall constitute a minor amendment, and therefore to request a transfer or assignment, Permittee shall submit to CDFW a completed CDFW "Request to Amend Lake or Streambed Alteration" form and include with the completed form payment of the minor amendment fee identified in CDFW's current fee schedule (see Cal. Code Regs., tit. 14, § 699.5).

EXTENSIONS

In accordance with Fish and Game Code section 1605, subdivision (b), Permittee may request one extension of the Agreement, provided the request is made prior to the expiration of the Agreement's term. To request an extension, Permittee shall submit to CDFW a completed CDFW "Request to Extend Lake or Streambed Alteration" form and include with the completed form payment of the extension fee identified in CDFW's current fee schedule (see Cal. Code Regs., tit. 14, § 699.5). CDFW shall process the extension request in accordance with Fish and Game Code section 1605, subdivisions (b) through (e).

If Permittee fails to submit a request to extend the Agreement prior to its expiration, Permittee must submit a new notification and notification fee before beginning or continuing the project the Agreement covers (Fish & G. Code § 1605, subd. (f)).

EFFECTIVE DATE

The Agreement becomes effective on the date of CDFW's signature, which shall be: 1) after Permittee's signature; 2) after CDFW complies with all applicable requirements under the California Environmental Quality Act (CEQA); and 3) after payment of the applicable Fish and Game Code section 711.4 filing fee listed at https://www.wildlife.ca.gov/Conservation/CEQA/Fees.

TERM

This Agreement shall expire on **December 31, 2025**, unless it is terminated or extended before then. All provisions in the Agreement shall remain in force throughout its term. Permittee shall remain responsible for implementing any provisions specified herein to protect fish and wildlife resources after the Agreement expires or is terminated, as Fish and Game Code section 1605, subdivision (a)(2) requires.

AUTHORITY

If the person signing the Agreement (signatory) is doing so as a representative of Permittee, the signatory hereby acknowledges that he or she is doing so on Permittee's behalf and represents and warrants that he or she has the authority to legally bind Permittee to the provisions herein.

AUTHORIZATION

This Agreement authorizes only the project described herein. If Permittee begins or completes a project different from the project the Agreement authorizes, Permittee may be subject to civil or criminal prosecution for failing to notify CDFW in accordance with Fish and Game Code section 1602.

CONCURRENCE

Through the electronic signature by the permittee or permittee's representative as evidenced by the attached concurrence from CDFW's Environmental Permit Information Management System (EPIMS), the permittee accepts and agrees to comply with all provisions contained herein.

The EPIMS concurrence page containing electronic signatures must be attached to this agreement to be valid.

EPIMS-SON-17086-R3 - 60 inch culvert crossing - 2021

Amendment Details

Notification Type: 10147-Notify for Standard Agreement (Cannabis and non-Cannabis)
Region: Region 3
Status: Submitted
Amendment Number: 001
Amendment Type: Project Revision
Amendment Title: EPIMS-SON-17086-R3 - 60 inch culvert crossing - 2021

Initial Submit Date: Dec 10, 2025 9:59 AM
Initially Submitted By: Joseph Pearson
Last Submit Date:
Last Submitted By:
Approved Date:

Contact Information

Primary Contact Information

User Title:
Joseph (First Name) Erich (Middle Name) Pearson (Last Name)

User Email*: compliance@sparc.co

User Address*: 975 Corporate Center PKWY, STE 115

Santa Rosa (City) California (State/Province) 95407 (Postal Code/Zip)

User Phone*: (707) 584-6923 (Phone) Ext.

Organization Information

Organization Name*: WWCMC

Organization Type*: Business

Organization Website:

Address*: 975 Corporate Center PKWY, STE 115

Santa Rosa (City) California (State/Province) Ext. 95407 (Postal Code/Zip)

Phone*: (707) 584-6923 Ext.

Amendment and/or Extension

Request to Amend Agreement

Are you requesting to amend the current agreement?

Response*: No

Request to Extend Agreement Term

Are you requesting to extend the current agreement term?

Response*: Yes

Time Frame

Current Agreement Expiration Date*: 12/31/2025

CDFW may not extend an agreement for more than five years.

New Expiration Date Requested*: 04/30/2028

Project Details

Describe the work that has been completed.

Work Completed*:

Project designs complete. No construction has been done.

Character Limit: 10,000

Describe the work that needs to be completed. If the work identified in the original agreement has not been completed, specify the amount of time needed to complete the work. Indicate if the seasonal work period(s) have changed. If they have changed, a Request to Amend the agreement and applicable fee must also be submitted.

Work to be Completed*:

All construction of replacement culvert needs to be completed. This will likely occur during summer of 2027. No seasons of work have changed.

Character Limit: 10,000

Explain the reason(s) for the extension request.

Reason(s) for Extension*:

We are in the process of obtaining grant funding from CDFW to construct the project. If awarded, we will proceed with construction.

Character Limit: 10,000

Documents and Maps

Description:

Description:

Description:

Description:

Description:

Description:

Description:

Description:

Description:

Description:

Description:

Description:

Description:

Description:

Description:

Description:

Description:

Description:

Description:

Description:

Electronic Signature

I hereby certify that to the best of my knowledge the information in this amendment and/or extension request (?request?) is true and correct and that I am authorized to sign this request as, or on behalf of, the applicant.

I Certify*: JP

I understand that if any information in this request is found to be untrue or incorrect, CDFW may suspend processing this request or suspend or revoke any draft or final Lake or Streambed Alteration Agreement issued pursuant to this request.

I Understand*: JP

I understand also that if any information in this request is found to be untrue or incorrect, I and/or the applicant may be subject to civil or criminal prosecution.

I Understand*: JP

I understand that this notification applies only to the project(s) described herein and that I and/or the applicant may be subject to civil or criminal prosecution for undertaking any project not described herein, unless CDFW has been separately notified of that project in accordance with Fish and Game Code section 1602 or 1611.

I Understand*: JP

Electronic Signature*: J. Erich Pearson
First and Last Name

Date*: 12/10/2025

Total Fees Due

Amendment Fees: $0.00

Extension Fee: $752.75

TOTAL (All Fees): $752.75

Payment Information

Payment Method	Document#*	Name of the Bank/Institution*	Check/Money Order #*
Credit Card	D-0045776422-7		

SONOMA COUNTY
PERMIT SONOMA

Zoning & Parcel Report

Parcel Number: 053-100-017

BLD23-5070 - Building Permit

Upgrade (E) Culvert with New Open-Bottom Aluminum Arch Culvert

Opened Date:
8/1/2023

Permit Number:
BLD23-5070

Permit Type:
Building Permit

Applicant:
Shelley Woods

Primary Address:
101 Trinity Rd, Glen Ellen 95442

Permit Description:
Upgrade (E) 72" CMP Culvert with New Open-Bottom Aluminum Arch Culvert

Status: Issued
6/25/2025

Important Disclaimers

- All reasonable effort has been made to ensure the accuracy of the data provided. However, some of the data may be out of date or inaccurate.
- The County of Sonoma assumes no responsibility arising from the use of this information. This information and associated data are provided without warranty of any kind, either expressed or implied, including but not limited to, the implied warranties of merchantability and fitness for a particular purpose. Do not make any business or financial decisions based on this data before validating the data with Permit Sonoma.

- The Permit History provided may not include all records for this property. Further investigation may be required to obtain a more complete history due to: address changes, parcel mergers, splits, retirements, etc.
- Date(s) listed in this report reflect the earliest known date(s) associated with each record. The date(s) listed are not associated with the current status.
- Permit Status Definitions have been modified through time to better identify milestones during the lifespan of a specific record type. Many historical records reflect statuses which are no longer in use.
- Although every reasonable effort is made to provide complete and accurate information on this website, visitors are advised to contact appropriate Permit Sonoma staff before making project decisions or property purchase/lease decisions. This may involve contacting more than one section within Permit Sonoma (Building Inspection, Plan Check, Planning/Zoning, Well & Septic, etc.) since each section implements specific codes or ordinances which may affect your project.

Permit Sonoma

Sign Up for Permit Sonoma Email Updates

Email Address
PermitSonoma@sonomacounty.gov

Phone Operator
Phone: (707) 565-1900
CA Relay Service: 711

In Person Hours
Monday - Tuesday,
Thursday - Friday
8:00 AM - 4:00 PM
Wednesday
10:30 AM - 4:00 PM

Permit Center & Mailing Address
2550 Ventura Avenue
Santa Rosa, CA 95403
Google Maps™ Directions

April 8, 2025

Adobe Associates, Inc. VIA EMAIL
Attn. Shelley Woods and Tim Schram
1220 N. Dutton Ave.
Santa Rosa, CA 95401

Re: **File No.:** ZPE23-0130
Address: 101 Trinity Road, Glen Ellen, CA., 95442
APNs: 053-100-016 and 053-100-017
Zoning Permit: Zoning Permit for Culvert Improvement at 101 Trinity Road, Glen Ellen, Sonoma County, California

This letter is in reference to your application for a Zoning Permit pursuant to Section 26-65-030 of the Sonoma County Code to replace an existing culvert with an arched culvert, with an open natural bottom design. This project would occur in Trinity Creek in the town of Glen Ellen, California. The project is set on the following APNs.

- 053-100-016: zoning for LIA B6 100, LIA B6 100 Z, LG/MTN MR OAK RC50/25 SR
- 053-100-017: zoning for **LIA B6 100, LIA B6 100 Z, LG/MTN MR OAK RC50/25 SR**

The Applicant proposes the replacement of an existing 72-inch (six foot) diameter by 40-foot long Corrugated Metal Culvert (CMC) with an aluminum Arch culvert design, having an open bottom, that measures 13- feet-three-inches wide by six- feet-nine-inches heigh by 36-feet long.

The need for the new culvert is twofold: to create additional space sufficient to allow unimpeded surface flow volume in Trinity Creek, while also protecting the owners from the potential loss of life and property in the event of a large storm event. The wider opening at the arch culvert ends is designed to allow passage of a 100-year storm flow volume. The arch culvert will be placed on concrete footings to allow for an open bottom natural substrate to better facilitate passage of aquatic species in the creek. A concrete headwall and wingwalls would be constructed at the arched culvert inlet and outlet to compensate for the four-foot loss in culvert length.

In channel work will occur within the construction work window of June 15 to October 15. Trinity Creek is expected to be mostly dry during construction in late summer to early fall, though standing water may persist at an existing scour pool at the culvert outlet. If this is the case, then a qualified biologist will conduct aquatic species surveys and relocation while the approved dewatering plan is implemented. The dewatering plan will involve a temporary diversion and pipe systems to pump water out of the site to be discharged outside of the channel to an existing wetland that parallels along the creek for 200 feet. Construction work is expected to take six weeks and will involve: (1) excavation and removal of the existing culvert; (2) installation of temporary falsework in preparation for the new culvert; (3) recontouring of the channel bed and banks to better conform with upstream and downstream conditions and improve fish passage; and (4) installation of concrete footings,

the new aluminum arch culvert, and associated concrete headwalls and wingwalls. Project activities will require the use of heavy equipment such as a dozer and/ or an excavator and will occur from the roadway to the extent feasible. Grading work will require the removal of up to 6 riparian trees, including 5 small native oaks and one Oregon ash. Disturbed areas will be restored and stabilized post-construction with erosion control measures and revegetation, including the installation 18 native tree plantings.

The project was also reviewed by the San Francisco Bay Regional Water Quality Control Board (SFBRWQCB) the U. S. Army Corps of Engineers (Corps) Regulatory Branch, and the California Department of Fish and Wildlife (CDFW). SFBRWQCB, the Corps, and CDFW have issued permits, authorized under provisions of the Clean Water Act and the Lake and Streambed Alteration Agreement, for this project. Pursuant to these permits, the applicant has agreed to the terms and conditions provided therein and will carry them out as part of the project activities to mitigate for project related impacts to water quality and wildlife habitat.

On January 26, 2021, the County of Sonoma, as lead agency, adopted a Mitigated Negative Declaration (State Clearinghouse (SCH) No. 2020120219) for these project types and filed a Notice of Determination (NOD) at the SCH on February 3, 2021. The Water Board, as a Responsible Agency under CEQA, has reviewed the project CEQA documents and finds that the project' s significant environmental effects that are within the Water Board' s purview and jurisdiction have been identified and will be mitigated to less- than- significant levels. Specifically, significant impacts pertaining to wetland and aquatic habitat and water quality will be mitigated to less- than- significant levels through the implementation of mitigation measures identified in the CEQA documents and the mitigation identified above, all of which are required to be implemented and reported on by this Order.

The Sonoma County Zoning Code Section 26-65-040 (Riparian Corridors) allows small riparian habitat restoration not exceeding five (5) acres within Riparian Corridors, as described by CEQA Guidelines Section 15333, and subject to a zoning permit. Additionally, the project is subject to SFBRWQCB and CDFW agreements with extensive conditions to ensure that no damage occurs to the blue line creek, riparian areas, and plants and animals who may use the area.

This Zoning Permit is approved for the use as described on the application materials submitted to this department and as modified by agreements provided by the SFBRWQCB, Corps, and CDFW. Any modifications of the use, expansion or alteration shall be submitted for review and approval by Permit Sonoma in advance of the proposed change and may, at the discretion of the department, require a new Zoning Permit.

This decision may be appealed in writing, along with an appeal fee, within ten (10) calendar days of the date of this letter.

If you have any questions, feel free to contact David Walsh via email at david.walsh@sonoma-county.org or at (707) 565-2526 or me at John.Mack@sonoma-county.org. Please refer to your file number (ZPE23-0130) and site address when making inquiries.
Sincerely,

April 8, 2025

John J. Mack
Natural Resources Division Manager

Enclosure: Conditions of Approval
c: Peter Gordenker
Sarah Leonor Gordenker

File

Conditions of Approval

Date: March 12, 2025 File No.: ZPE23-0130
Applicant: Gordenker Turkey Farm APNs: 053-100-016 and 053-100-017
Owner: Peter Gordenker, Sarah Leonor Gordenker Address: 101 Trinity Road, Glen Ellen, CA., 95442

Project Description: Zoning Permit for Culvert Improvement at 101 Trinity Road, in Glen Ellen, Sonoma County, California

---

1. **Project Documents:** The Permittee will implement the project based on materials submitted in the zoning permit application and additional materials.

2. **Work Period**: All work shall be completed by October 15. Revegetation work is not limited to this work window but must be completed within the same season as project activities. **If more time is needed to complete project activities, the work period may be modified in writing on a week-by-week basis by a County of Sonoma representative.** Requests for a work period extension shall be submitted to David Walsh, Snr. Environmental Specialist at david.walsh@sonoma-county.org. The request for a work extension shall: 1) describe the extent of work already completed or a justification why the work needs to be conducted outside the work period; 2) detail the activities that remain to be completed or must be completed; 3)detail the time required to complete each of the activities; 4) provide photographs of both the current work completed and the proposed site for work; and 5) include an assessment of additional biological impacts as a result of the work extension.

3. **Weather Restrictions:** Project work shall be restricted to dry weather as allowed during the work period specified in Condition #2, above. Construction shall be timed with awareness of precipitation forecasts. Construction activities shall cease when the National Weather Service (NWS) 72-hour weather forecast indicates a 30 percent chance or higher of precipitation. All necessary erosion control measures shall be implemented prior to the onset of precipitation. Construction equipment and materials shall be removed if inundation is likely. Construction activities halted due to precipitation may resume when precipitation ceases, and the NWS 72-hour weather forecast indicates less than a 30 percent chance of precipitation. No work shall occur during a dry-out period of 24 hours after the above referenced wet weather. Weather forecasts shall be documented upon request by County of Sonoma representatives.

4. **Work During Daylight Hours:** Work is restricted to daylight hours (one hour after sunrise to sunset).

5. **Best Management Practices ("BMP's)** shall be incorporated into the project, as needed, including turbidity curtains, silt fencing and erosion control measures, to prevent off-site movement of sediment and dust during and post planting activities, as needed. **No erosion control materials containing plastic monofilament netting shall be used due to potential entanglement by amphibians or reptiles.** BMPs will be inspected weekly and immediately after storm events to insure they are intact and functioning and maintained, repaired or replaced immediately, if needed. Following construction, Permittee shall be responsible for BMPs to ensure they are functioning. All BMPs will be removed and disposed of once the site is stable and revegetated.

6. **Erosion and Sediment Control:**
    a. **Erosion Control** - At no time shall silt-laden runoff be allowed to enter or directed to where it may enter a surface water. Erosion control measures shall be utilized throughout all phases of operation where sediment runoff from exposed slopes threatens to enter surface waters. Erosion control measures, such as, silt fences, straw hay bales, gravel or rock lined ditches, water check bars, and broadcasted straw shall be used wherever sediment has the potential to leave the work site and enter surface waters.

b. **Erosion Control Monitoring** – Permittee shall monitor erosion control measures weekly and during and after each storm event and maintain, repair or replace immediately, as needed.
c. **Disposal of Materials** – All removed spoils and construction debris shall not be located within the surface waters or located in an area where spoils may be washed into surface waters or impact riparian or aquatic habitat. All removed material shall be disposed of according to state and local laws and ordinances.

7. Vegetation Protection, Prevention and Restoration:

a. **Vegetation Removal.** No trees other than those identified in the project description will be removed. Tree trimming and shrub removal will be minimal.

b. **County of Sonoma Tree Ordinance:** The project is subject to the Sonoma County Tree Protection Ordinance. Protected trees located near project activities shall have construction fencing installed around the drip lines to protect their roots. Soil compaction or cutting of roots shall be avoided.

c. **Treatment of Exposed Areas:** All exposed areas and access pointes within the riparian zone left barren of vegetation as a result of construction activities shall be restored by seeding with a blend of native erosion control grass seed. Seeded areas shall be mulched. Revegetation shall be completed as soon as possible after construction. Seeding placed after October 15 must be covered with broadcast straw, jute netting, coconut fiber blanket or similar erosion control blanket.

d. **Prohibited Plant Species:** Permittee shall not plant, seed, or otherwise introduce invasive exotic plant species. Prohibited exotic plant species include those identified in the California Exotic Pest Plant Councils database which is accessible at www.cal-ipc.org

8. Construction Standards. Development permit applications proposing a project or activity involving disturbance on or within the protected perimeter of retained protected trees shall be subject to the following construction standards, unless the Director waives one or more standards and makes findings consistent with section 26-88-010(M), subsection A, subdivision 6:

a. Protected trees, their protected perimeter and whether they are to be retained or removed are to be clearly shown on all improvement plans. A note shall be placed on the improvement plans that "Construction is subject to requirements established by Sonoma County to protect certain trees."

b. Before the start of any clearing, excavation, construction or other work on the site, every tree designated for protection on the approved site plan shall be clearly delineated with a substantial barrier (steel posts and barbed wire, chain link fencing, orange construction fencing, or other exclusionary barrier) at the protected perimeter or limits established during the permit process. The delineation markers shall remain in

place for the duration of all work. All trees to be removed shall be clearly marked. A scheme shall be established for the removal and disposal of brush, earth and other debris as to avoid injury to any protected tree.

c. Where proposed development or other site work must encroach upon the protected perimeter of a protected tree, special measures shall be incorporated to allow the roots to obtain oxygen, water and nutrients. Tree wells or other techniques may be used where advisable. No changes in existing ground level shall occur within the protected perimeter unless a drainage and aeration scheme approved by a certified arborist is utilized. No burning or use of equipment with an open flame shall occur near or within the protected perimeter (except for authorized controlled burns).

d. No storage or dumping of oil, gasoline, chemicals or other substances that may be harmful to trees shall occur within the protected perimeter of any tree, or any other location on the site from which such substances might enter the protected perimeter.

e. If any damage to a protected tree should occur during or as a result of work on the site, the county shall be promptly notified of such damage. If a protected tree is damaged so that it cannot be preserved in a healthy state, the planning director shall require replacement in accordance with the arboreal value chart. If on-site replacement is not feasible, the applicant shall pay the in-lieu fee to the tree replacement fund.

9. **Pre-Construction Nesting Bird Survey - A pre-construction nesting bird survey conducted by a qualified biologist shall occur if construction, grading, vegetation removal, or other project related activities are scheduled during the bird nesting season (February 1-August 31).** The survey shall be conducted within 5 days prior to the start of work. The survey shall include the trees and shrubs on and immediately adjacent to the project site and a minimum 500-foot buffer, as accessible. Surveys shall include potential raptor nesting on and adjacent to the site. If a lapse in project-related work of 5 days or longer occurs, another survey shall be conducted before project work can be reinitiated. Survey results will be submitted to Permit Sonoma to David.Walsh@sonoma-county.org. If no active nests are detected during surveys, activities may proceed within the bird nesting season. If active nests are detected, then protective measures a through d below shall be implemented.

   a. **Breeding Bird Take Prohibition**. Permittee shall avoid active nests occurring near the project site. Permittee is responsible to comply with the Migratory Bird Treaty Act of 1918 and the Fish & Game Code of California, section 3503.
   b. **Active Nest Buffers**. If active nests are identified near project improvements, non-disturbance buffers shall be established by a qualified professional biologist at a distance sufficient to minimize disturbance based on the nest location, topography, cover and species' tolerance to disturbance. Buffer size shall be determined in cooperation with Permit Sonoma and California Department of Fish and Wildlife (CDFW). Buffers shall remain in place until a qualified biologist determines that the young have successfully fledged or nests have been otherwise abandoned.

c. **Determining Nest Buffer Distances.** Buffer distances for bird nests should be site specific and at an appropriate distance, as determined by a qualified biologist in coordination with Permit Sonoma and CDFW. The buffer distances should be specified to protect the bird's normal bird behavior to prevent nesting failure or abandonment. The buffer distance recommendation should be developed after field investigations that evaluate the bird(s) apparent distress in the presence of people or equipment at various distances. Abnormal nesting behaviors which may cause reproductive harm include but are not limited to defensive flights/vocalizations directed towards project personnel, standing up from a brooding position and flying away from the nest. The qualified biologist shall have authority to order the cessation of all nearby project activities if the nesting birds exhibit abnormal behavior which may cause reproductive failure until an appropriate buffer is established.

d. **Nest Monitoring** – A qualified professional biologist shall be on site as necessary to monitor the nests for signs of nest disturbance. If it is determined that construction activity is resulting in nest disturbance, work shall cease immediately and Permit Sonoma and CDFW shall be contacted.

10. **Spills and Emergencies:** The following measures for spill protection will be implemented:
    a. **Spill Kits –** Prior to entering the work site, all field personal shall know the location of spill kits and trained in their appropriate use.
    b. **Spill Containment –** All activities performed in or near a river, stream or other surface water shall have absorbent material designed for spill containment and cleanup activities on-site for use in an accidental spill. The Permittee shall immediately notify the California emergency Management Agency at 1-800-852-7500 and immediately initiate the clean-up activities. Permittee shall notify County of Sonoma regarding the spill and cleanup activities.

11. **Other Permits and Authorizations:** The applicant or any person acting on behalf of the applicant, including contractors and subcontractors, shall obtain any other permits or authorizations that may be required under other federal, state, or local laws and regulations before beginning the project or any activity related to the project. A violation of any applicable statute, ordinance, rule or regulation shall be a violation of the Zoning Permit, subject to revocation. It is the applicant's responsibility to determine whether and to what extent the project will require permits or authorizations from other agencies, including, but not limited to, the following agencies: U.S. Army Corps of Engineers, U.S. Fish and Wildlife Service, National Marine Fisheries Service, California Department of Fish and Wildlife, and State and Regional Water Quality Control Boards.

12. **Permit Expiration Timeline**- In any case where a Zoning Permit has not been used within two (2) years after the date of granting thereof, or for such additional period as may be specified in the permit, such permit shall become automatically void and of no further effect, provided however, that upon written request by the applicant prior to the expiration of the two (2) year period the permit approval may be extended for not more than one (1) year by the authority which granted

the original permit pursuant to Section 26-92-130 of the Sonoma County Code.

Exhibit 3: Grant Award Documents

STATE OF CALIFORNIA
DEPARTMENT OF FISH AND WILDLIFE

GAVIN NEWSOM, Governor
MEGHAN HERTEL, Director

P.O. Box 944209
Sacramento, CA 94244-2090
wildlife.ca.gov

Sonoma Resource Conservation District
1221 Farmers Lane, Suite F
Santa Rosa, CA 95405

May 29, 2026

Notice to Proceed: Phase II Calabazas and Trinity Salmonid Access and Habitat Enhancement Project, Grant Agreement Number Q2591206

Dear Christine Kuehn,

The grant term for the Phase II: Calabazas and Trinity Salmonid Access and Habitat Enhancement Project is May 11, 2026, through April 30, 2029. The requirements for the project to begin work are complete. This letter serves as a Notice to Proceed for the project, effective May 11, 2026, in accordance with Grant Agreement Number Q2591206.

Please provide landowner access agreements (Subtask 1.4) prior to accessing private land and collecting data, as outlined in the Grant Agreement.

Please include myself in addition to the Cannabis Restoration Grant Program Grant Coordinator, Luis Mendoza Luis.Mendoza@wildlife.ca.gov, when submitting project related correspondence.

Please see the attached fully executed Grant Agreement, Progress Report Template, and Invoice Template. Please contact me by phone (707) 531-0425 or email Timothy.Dodson@wildlife.ca.gov with any questions. We look forward to working with the Sonoma Resource Conservation District and seeing this project succeed.

Sincerely,

DocuSigned by:
4E486B3634354E0...
5/29/2026

Tim Dodson
Cannabis Restoration Grant Program Grant Manager

Docusign Envelope ID: 01663044-C841-446B-8A8C-44EFC072D170

copies of the permit applications and fee receipts to the CRGP Grant Manager no later than the date specified in Section 6.05.

The Grantee will ensure all regulatory permit applications for the Calabazas Creek Restoration Design are submitted before the end of the Grant Term, April 30, 2029.

Task 3 Trinity Creek Fish Passage Implementation

The Grantee will implement the final Culvert Improvement Plan, accepted by the regulatory agencies with permitting authority, including all protection measures and conditions. The Grantee will restore Trinity Creek riparian areas along a 1,200-foot-long contiguous stream reach by removing invasive species and revegetating with regionally appropriate native plant species.

Subtask 3.1 Construction Bid Package: The Grantee will develop a Construction Bid Package prior to implementing the Culvert Improvement Plan 100% Design Plans, including all permit conditions, protections, and requirements. The Grantee will submit a Draft Construction Bid Package and Final Construction Bid Package to the CRGP Grant Manager no later than the dates specified in Section 6.05.

Subtask 3.2 Stream Dewatering: The Grantee will provide a Stream Dewatering Plan prior to any work in Trinity Creek that addresses potential surface and instream flows during Project implementation. The dewatering plan will include the appropriate biological clearance and monitoring in addition to all protections outlined in current valid regulatory permits. The Grantee must deliver the Stream Dewatering Plan to the CRGP Grant Manger no later than the date specified in Section 6.05.

Subtask 3.3 Trinity Creek Riparian Restoration Plan: The Grantee will develop the Trinity Creek Riparian Restoration Plan, including the Invasive Species Removal and Management Plan, Riparian Revegetation Plan, Irrigation Plan, and Soil Stabilization/Winterization Plan for Trinity Creek riparian enhancement. The Trinity Creek Riparian Restoration Plan will include the following elements:

Relevant background information, including:

a. Description of existing vegetation and natural communities, including sensitive natural communities if applicable, within the Project area;
b. Site history;
c. Reference site vegetation description; and
d. Description of site hydrology and groundwater and any changes that may result from implementing the restoration plan

Docusign Envelope ID: 01663044-C841-446B-8A8C-44EFC072D170

3.3.1 Invasive Species Removal Plan, including:

a. Identification of invasive plants occurring within the Project area, California Invasive Plant Council Rank, and any prioritization per the Sonoma County Weed Management Area as applicable;
b. Species prioritization and occurrence information;
c. Recommended treatment summary for each species;
d. Management actions prior to and after implementing the Trinity Creek Restoration Plan, including equipment cleaning if necessary; and
e. Information on the disposal of invasive plants

3.3.2 Native Plant Revegetation Plan, including:

a. Planting plan
    i. Description of native plant groups in the restoration designs, including the corresponding natural communities, layout of plant groups, and size acreage or square feet of each plant group;
b. Implementation workplan, including:
    i. Habitat preservation;
    ii. Ground surface preparation;
    iii. Live hardwood pole acquisition, storing, and installation;
    iv. Salvaged vegetation, including willow clumps;
    v. Handling, storage, and installation methods;
    vi. Containerized plant storage and installation methods;
    vii. Seeding and mulching plan; and
    viii. Maintenance and irrigation schedule
c. Plant material acquisition, including:
    i. A list of all plant materials, including the species, type (poles, bareroot, or containerized stock) and size;
    ii. Quantity of each species;
    iii. Seed mix;
    iv. Quantity of mulch; and

Docusign Envelope ID: 01663044-C841-446B-8A8C-44EFC072D170

v. Source(s) of plant material, including consideration of non-native pathogen management

d. Revegetation design, including a schematic illustrating the following:
   i. Locations of native plant groups;
   ii. Species in each group;
   iii. Plant layout;
   iv. Planting density;
   v. Spacing details; and
   vi. The total area of each plant group

e. Revegetation maintenance and irrigation, including:
   i. Tree and shrub protections, if recommended; and
   ii. Invasive species control during the plant establishment phase

3.3.3 Irrigation Plan, including:

a. A description of the type of irrigation system and supporting infrastructure;
b. Water source;
c. Watering regime; and
d. Discussion of how the Irrigation Plan will successfully establish native revegetation and avoid the re-establishment of invasive species

3.3.4 Soil Stabilization/Winterization Plan that addresses potential erosion and site winterization, including:

a. Anticipated materials;
b. Erosion control material application following best management practices;
c. Erosion control implementation schedule; and
d. Erosion Control maintenance schedule

3.3.5 Site Monitoring Plan, including:

a. Pre and post invasive species removal and revegetation photo-monitoring based on established protocols; and
b. Identify the latitude, longitude, direction (in compass degrees), and photo elevation that accurately captures pre and post riparian restoration efforts

Docusign Envelope ID: 01663044-C841-446B-8A8C-44EFC072D170

The Grantee will provide the Draft Trinity Creek Riparian Restoration Plan to the CRGP Grant Manager a minimum of 30 days prior to submitting the Final Trinity Creek Riparian Restoration Plan. The Grantee will submit the Final Trinity Creek Riparian Restoration Plan to the CRGP Grant Manager no later than the date specified in Section 6.05.

Subtask 3.4 Trinity Creek Riparian Restoration Report: The Grantee will provide a Draft Trinity Creek Riparian Restoration Report to the CRGP Grant Manager a minimum 30 days prior to submitting the Final Trinity Creek Riparian Restoration Report. The Grantee will submit the Final Trinity Creek Riparian Restoration Report to the CRGP Grant Manager no later than the date specified in Section 6.05.

Subtask 3.5 Trinity Creek Post Implementation As-Built Plans: The Grantee will provide a detailed set of Culvert Improvement As-Built Plans documenting the grade, elevation, angle, and overall as-built conditions in addition to the longitudinal profile of the culvert extending upstream and downstream. The Grantee will submit the Culvert Improvement As-Built Plans to the CRGP Grant Manager no later than the date specified in Section 6.05.

Task 4 Calabazas Creek Restoration Plan

The Grantee will develop design plans for the remediation and potential replacement of a bridge spanning Calabazas Creek in addition to the restoration of salmonid habitat and enhancement of riparian habitat along 2,400 feet of Calabazas Creek. All Project designs must adhere to the engineer design criteria in accordance with Section 5.9.

Subtask 4.1 Calabazas Creek Restoration Technical Advisory Committee: The Grantee will engage with local, state, and federal permitting agencies, tribal entities, and other interest groups that include project designers and project resource professionals, to inform the design plans. Input from the Calabazas Creek Restoration Technical Advisory Committee (TAC) will inform the conceptual (30% Design Plans), potential design (65% Design Plans), and preferred design (minimum 90% Design Plans) development phases of the Project.

The Technical Advisory Committees created under this Agreement are not legislative bodies, do not directly advise any legislative body, and are not created as a result of a formal vote or action of the State of California or the CDFW.

The Grantee will convene at least one TAC meeting for each basis of design phase (30% Design Plans, 65% Design Plans, and minimum 90% Design Plans). More than one TAC meeting may be needed for any phase. Additional meetings should be based on the consensus of the participating TAC members. The Grantee will schedule and convene the TAC meetings in accordance with the dates outlined in Section 6.05.

Exhibit 4 - Sample Contract

CONTRACT BETWEEN SONOMA RESOURCE CONSERVATION DISTRICT AND FULL COMPANY NAME FOR PROJECT NAME

Sonoma Resource Conservation District, a Special District of the State of California under Division 9 of the California Public Resources Code, hereinafter referred to as "SRCD," hereby enters into a contract (Contract) with Full Company Name, a type of company, hereinafter referred to as "Contractor", for Project Name, hereinafter known as "Project."

TERMS AND CONDITIONS

1. **Effective date and duration**: This Contract shall become effective upon signing of both parties and shall be in effect until MONTH DAY, 20XX, or such time as may be extended by permissible delays.

2. **Termination:** Either party shall have the right to terminate this Contract for any reason upon 30-day written notice to the other party. In the event of such termination, Contractor shall be entitled to payment for all work performed on the Project prior to such termination.

3. **List of Attachments:** The following documents are attached hereto and made a part hereof:

   Exhibit A: Scope of Work (Exhibit A)

   Exhibit B: Cost Proposal (Exhibit B)

   Exhibit C: Grant Award Documents (Exhibit C)

   Exhibit D: Protocols for Emergencies and Unexpected Events (Exhibit D)

   Exhibit E: IRS Form W-9 (Exhibit E)

4. **Contractor Responsibilities:**

   A. Contractor shall provide services to the SRCD as described in Exhibit A.

   B. Contractor shall supply all labor and equipment needed to complete work as directed in this Contract.

   C. Work will be performed on a unit price, lump sum, or time and materials not to exceed basis as reflected in the project proposal in Exhibit B.

   D. Final report and invoice will be due by MONTH DAY, 20XX. ***DELETE THIS LINE IF NOT RELEVANT.***

5. **Total Costs:** Not to exceed **$X** without written authorization from SRCD. Additional work exceeding Total Cost will not be authorized without a Change Order. Change Order requires agreement by Contractor and SRCD on scope, cost, and schedule. No work shall start until an approved Change Order is in place.

6. **Invoices:** Contractor will provide copies of invoices and receipts for purchases of any materials, supplies, or outside services with invoices. Invoices shall include a detailed description of services rendered and should reference the Contract No. xx.

a. Invoices shall be emailed to name of contract manager at email of contract manager.

b. Contractor shall submit invoices by the 10th of the month for services provided or qualifying expenditures made during the previous month.

7. **Bonding:** Prior to the start of the Project, Contractor will furnish a performance bond in favor of SRCD in the following amounts: faithful performance (100%) of originally submitted cost proposal; labor and materials (100%) of originally submitted cost proposal. The not to exceed amount in Section 5 and estimated job costs in Exhibit B are inclusive of the performance bond premium amount.

8. **Compliance with Applicable Laws:** In the performance of the work provided by this Contract, Contractor and SRCD shall comply with all applicable Federal, State and local laws, rules, ordinances, codes, and regulations (collectively "Laws") that are applicable to the subject matter of this Contract, inclusive of all orders issued by the Health Officer of the County of Sonoma. Furthermore, Contractor is informed and aware that this Contract is funded by a federal grant from X, which grant is conditioned upon various terms which apply to Contractor. Contractor has reviewed the grant award documents attached hereto as Exhibit C and hereby agrees to comply with them to the extent they apply to a subcontractor.

9. **SRCD Responsibilities:**

A. Certifications and Registrations: SRCD will be responsible for obtaining certificates and registrations necessary for compliance with all state, county and federal mandates present for work in the area described.

B. Site Access: SRCD will provide site access to Contractor personnel for the purpose of completing the work described in this Contract.

C. Payments: Project is funded by xxx (Funder). The Funder will withhold up to ten percent (10%) of the total approved amount until the grant is completed. **Payments will be made to Contractor on the following schedule:**

- **SRCD will send payment to Contractor within 30 days of reimbursement from the Funder to the address below.** A completed Exhibit E must be on file with SRCD for payment to be issued.
- **SRCD will reimburse retention funds to Contractor within 30 days of reimbursement by the Funder.**

xx

Contact

Address

All inquiries regarding payments should be directed to:

Bo Young, Director of Finance

707-569-1448 x105

fp@sonomarcd.org

10. **Status of Contractor:** Contractor, in performing the services specified herein, shall act as an independent contractor. Nothing in this Contract shall be construed as creating a joint venture, partnership, employer/employee, or similar relationship between the Parties.

11. **Warranty:** For a period of one year after completion of the Project, Contractor shall provide a full warranty to the landowner for all work completed by it and shall replace or repair any work or materials that fail to function properly at no charge to the landowner or SRCD. Contractor shall also repair any surrounding areas, material or equipment that are damaged due to any negligence of Contractor for work completed within the one-year warranty period.

12. **Ownership:**

A. Ownership of Skills and Knowledge: Contractor shall retain all rights to approaches, skills, knowledge and experience acquired by Consultant during the Term of this Agreement.

B. Ownership of Work Product: All tangible and intangible results created by or on behalf of Consultant in the course of performing the services specified herein, together with any and all intellectual property rights therein, (collectively, the "Work Product") shall become the sole and exclusive property of the SRCD. As such, Contractor acknowledges and agrees that (i) all copyrightable aspects of the Work Product are deemed "works made-for-hire" as that term is defined by the United States Copyright Act, 17 U.S.C. Sections 101, et. seq.(or any successor thereto); and (ii) that SRCD is the exclusive owner of all right, title and interest, including the copyright and any and all other intellectual property rights, in and to the Work Product. To the extent that title to any such Work Product may not vest in SRCD by operation of law, or that any such Work Product may not be considered a "work made-for-hire," all right, title, and interest therein are hereby irrevocably assigned to SRCD exclusively throughout the world.

C. Pre-Existing Intellectual Property: Contractor will not incorporate any intellectual property owned by Contractor or any third party into any Work Product without SRCD's prior written permission, and agrees that the entire Indemnification Clause of Section 13 specifically applies to any third party claims associated with breach of this section.

D. Pre-Existing Materials: Contractor shall retain ownership of any materials that Contractor owned or had an interest in prior to the Effective Date ("Pre-Existing

Materials"). If Contractor incorporates any Pre-Existing Materials into any Work Product, Contractor hereby grants to SRCD a nonexclusive, royalty-free, perpetual, irrevocable, transferable, sublicensable, worldwide license to fully use and exploit the Pre-Existing Materials to the extent necessary to derive all value from the Work Product.

13. **Indemnification:** To the fullest extent permitted by law, Contractor shall indemnify and hold harmless and defend the SRCD, its directors, employees, agents and volunteers, and each of them, and the property owner where the work is being performed, from and against:

a) Any and all claims, demands, causes of action, damages, costs, expenses, losses or liabilities, in law or in equity, of every kind and nature whatsoever for, but not limited to, injury or death of any person including SRCD and/or Contractor, or any directors, officers, employees, or volunteers of the SRCD or Contractor, or the property owner, and damages to or destruction of property of any person, including but not limited to, SRCD and/or Contractor and their directors, officers, employees, agents and volunteers, and/or the property owner, arising out of Contractor negligent performance of the services to be performed under this Contract, except liabilities arising from negligence or willful misconduct of the SRCD or its directors, officers, employees, agents or volunteers;

b) Any and all actions, proceedings, damages, costs, expenses, penalties or liabilities, in law or equity, of every kind or nature whatsoever, arising out of, resulting from, or on account of the violation of any governmental law or regulation related to the Project, compliance with which is the responsibility of Contractor; and

c) Any and all losses, expenses, damages (including damages to the work itself), reasonable attorneys' fees, and other costs, including the costs of defense which may incur with respect to the negligent failure, or negligent refusal of Contractor to perform all its obligations under the Contract.

SRCD agrees to indemnify Contractor from any claims, damages, losses and costs, including, but not limited to, reasonable attorney's fees and litigation costs, to the proportionate extent caused by negligence, or willful misconduct of SRCD.

14. **Commercial General Liability and Automobile Liability Insurance:** Contractor shall provide proof of insurance, and shall name SRCD, its directors, officers, employees, agents and volunteers as additional insureds in Additional Named Insured Endorsement(s) for insurance coverage, in insurance policies with coverage at least as broad as the following for both commercial general liability and automobile liability insurance:

A. Insurance Services Offices Commercial Liability coverage (Occurrence Form CG 0001)

B. Insurance Service Offices Form Number CA 0001 covering Automobile Liability, Symbol 1 (any auto)

C. General Liability: One million dollars ($1,000,000) per occurrence for bodily injury, personal injury and property damage. If Commercial General Liability Insurance or other form with a general aggregate limit is used either the general aggregate limit shall apply (with the ISO CG 2503, or ISO CG 2504, or insurer's equivalent endorsement provided to the SRCD) or the general aggregate limit shall be twice the required occurrence limit.

D. Automobile Liability: One million dollars ($1,000,000) for bodily injury and property damage for each accident limit.

E. The general liability policy shall cover bodily injury and property damage liability, owned and non-owned equipment, blanket contractual liability, and completed operations liability.

F. The automobile liability policy shall cover all owned, non-owned, and hired vehicles.

G. Contractor shall provide proof of insurance to the SRCD upon the signing of this Contract and shall provide the Additional Named Insured Endorsement(s) prior to beginning any work.

15. **Workers' Compensation and Employer's Liability Insurance:** Contractor shall provide proof of insurance verifying that it is insured (or be qualified self-insured) under the applicable laws relating to workers' compensation insurance, all of their employees working on or about the construction site, in accordance with the "Workers' Compensation and Insurance Act," Division IV of the Labor Code of the State of California and any Acts amendatory thereof.

16. **Prevailing Wage:** The Project is subject to the requirements of Section 1720 et seq. of the California Labor Code requiring the payment of prevailing wages, the training of apprentices and compliance with other applicable requirements. Contractor and all subcontractors who perform work on the Project are required to comply with these requirements. Prevailing wages apply to all projects over $1,000 which are defined as a "public work" by the State of California. This includes construction, demolition, repair, alteration, maintenance, and even the installation of photovoltaic systems under a Power Purchase Agreement when certain conditions are met under Labor Code Section 1720.6. Service and warranty work on public buildings and structures is also included.

The applicable California prevailing wage rate can be found at www.dir.ca.gov and are on file with the SRCD's office, which shall be available to any interested party upon request. The contractor is also required to have a copy of the applicable wage determination posted and/or available at each jobsite.

Specifically, contractors are reminded of the need for compliance with Labor Code Section 1774-1775 (the payment of prevailing wages and documentation of such), Section 1776 (the keeping and submission of accurate certified payrolls) and 1777.5 in the employment of apprentices on public works projects. Further, overtime must be paid for work in excess of 8 hours per day or 40 hours per week pursuant to Labor Code Section 1811-1813.

Special prevailing wage rates generally apply to work performed on weekends, holidays and for certain shift work. Depending on the location of the project and the amount of travel incurred by workers on the project, certain travel and subsistence payments may also be required. Contractors and subcontractors are on notice that information about such special rates, holidays, premium pay, shift work and travel and subsistence requirements can be found at www.dir.ca.gov.

Only bona fide apprentices actively enrolled in a California Division of Apprenticeship Standards approved program may be employed on the project as an apprentice and receive the applicable apprenticeship prevailing wage rates. Apprentices who are not properly supervised and employed in the appropriate ratio shall be paid the full journeyman wages for the classification of work performed.

The public entity for which work is being performed or the California Department of Industrial Relations (DIR) may impose penalties upon contractors and subcontractors for failure to comply with prevailing wage requirements. These penalties are up to $200 per day per worker for each wage violations identified; $100 per day per worker for failure to provide the required paperwork and documentation requested within a 10-day window; and $25 per day per worker for any overtime violation.

As a condition to receiving progress payments, final payment and payment of retention on any and all projects on which the payment of prevailing wages is required, Contractor agrees to present to SRCD, along with its request for payment, all applicable and necessary certified payrolls (for itself and all applicable subcontractors) for the time period covering such payment request. The term “certified payroll” shall include all required documentation to comply with the mandates set forth in Labor Code Section 1720 et seq, as well as any additional documentation requested by SRCD or its designee including, but not limited to: certified payroll, fringe benefit statements and backup documentation such as monthly benefit statements, employee timecards, copies of wage statements and cancelled checks, proof of training contributions (CAC2 if applicable), and apprenticeship forms such as DAS-140 and DAS-142.

In addition to submitting the certified payrolls and related documentation to SRCD, Contractor and all subcontractors shall be required (for all projects awarded after April 1, 2015) to submit certified payroll and related documents electronically to the DIR. Failure to submit payrolls to the DIR when mandated by the project parameters shall also result in the withholding of progress, retention and final payment.

SRCD shall withhold any portion of a payment; including the entire payment amount, until certified payroll forms and related documentation are properly submitted, reviewed and found to be in full compliance. In the event that certified payroll forms do not comply with the requirements of Labor Code Section 1720 et seq., SRCD may continue to hold sufficient funds to cover estimated wages and penalties under the Contract.

All contractors/subcontractors and related construction services subject to prevailing wage, including but not limited to trucking, surveying, and inspection work must be registered with the DIR as a “public works contractor”. Those who fail to register and

maintain their status as a public works contractor shall not be permitted to perform work on the project.

17. **Contractor's State License:** Contractor shall provide copy of current California state license, where applicable.

18. **Attorney Fees, Applicable Law and Forum:** In the event either party brings an action or proceeding for damages arising out of the other's performance under this Contract or to establish the right or remedy of either party, the prevailing party shall be entitled to recover reasonable attorney fees and costs as part of such action or proceeding. This Contract shall be construed and interpreted according to the substantive law of California, regardless of the law of conflicts to the contrary in any jurisdiction. Any action to enforce the terms of this Contract or the breach thereof shall be brought and tried in the forum nearest to the City of Santa Rosa, in the County of Sonoma.

19. **Nondiscrimination:** Contractor shall comply with all applicable federal, state, and local laws, rules and regulations in regard to non-discrimination. Contractor agrees not to unlawfully discriminate, harass, or to allow harassment against any employee or applicant for employment based on race, color, religion, religious creed (including religious dress and grooming practices), national origin, ancestry, citizenship, physical or mental disability, medical condition (including cancer and genetic characteristics), genetic information, marital status, sex (including pregnancy, childbirth, breastfeeding, or related medical conditions), gender, gender identity, gender expression, age, sexual orientation, veteran and/or military status, and any other status protected by state or federal law.

    During the performance of this agreement, Contractor shall not unlawfully discriminate against, harass, or allow harassment against any employee or applicant for employment because of race, religion, color, national origin, ancestry, physical disability (including HIV and AIDS), mental disability, medical condition, marital status, age (over 40), sex, sexual orientation, or use of family care leave, medical-care leave, or pregnancy-disability leave. Contractor shall take affirmative action to ensure that the evaluation and treatment of its employees and applicants for employment are free of such discrimination and harassment. Such action shall include, but not be limited to, the following: employment, upgrading, demotion or transfer; recruitment or recruitment advertising; layoff or termination; rates of pay or other forms of compensation; and selection for training, including apprenticeship. Contractor shall comply with the provisions of the Fair Employment and Housing Act (Government Code, Section 12900 (a-f) et seq.) and applicable regulations (California Code of Regulations, Title 2, Section 7285 et seq.). The regulations of the Fair Employment and Housing Commission regarding Contractor Nondiscrimination and Compliance (Chapter 5 of Division 4 of Title 2 of the California Code of Regulations) are incorporated by reference into this agreement. Contractor shall give written notice of its obligations under this non-discrimination clause to labor organizations with which Contractor has a collective bargaining or other agreement and shall post in conspicuous places available to employees and applicants for employment notice setting forth the provisions of this

section. Contractor agrees to put a substantially similar term in any subcontract it executes with another entity related to the performance of this agreement.

20. **No Waiver:** The waiver by either party of any breach or violation of any requirement of this Contract shall not be deemed to be a waiver of any such breach in the future, or of the breach of any other requirement of this Contract.

21. **Consent:** Wherever in this Contract the consent or approval of one party is required to an act of the other party, such consent or approval shall not be unreasonably withheld or delayed.

22. **Assignment and Delegation:** Neither party hereto shall assign, sublet, or transfer interest in or duty under this Contract without the written consent of the other, and no assignment shall be in force or effect whatsoever unless and until the other party shall so have consented.

23. **Severability:** If any provision of this Contract, or any portion thereof, is found by any court of competent jurisdiction to be unenforceable for any reason, such provision shall be severable and shall not in any way impair the enforceability of any other provision of this Contract.

24. **Authority to Contract:** Contractor and SRCD each warrant hereby that they are legally permitted and otherwise have the authority to enter into and perform this Contract.

25. **Notices**: Notice required to be given pursuant to the terms and provisions of this Contract shall be in writing and shall be sent first-class mail. Notice shall be deemed to be effective two (2) days after mailing to the following addresses:

To SRCD:

Christine Kuehn, Executive Director

Sonoma Resource Conservation District

1221 Famers Ln. Suite F

Santa Rosa, CA 95405

To CONTRACTOR:

Contact

Address

26. **Entirety of Contract:** This Contract, including any documents expressly incorporated by reference whether or not attached hereto, constitutes the entire Contract between the parties relating to the subject of this Contract and supersedes all previous agreements,

promises, representations, understandings and negotiations, whether written or oral, among the parties with respect to the subject matter hereof.

27. **Survival of Terms:** All express representations, waivers, indemnifications, and limitations of liability included in this Contract will survive its completion or termination for any reason.

28. **Publicity:** Contractor agrees to give appropriate credit to SRCD and any Funder(s) identified in this Contract for their financial support in any and all tours, press releases, publications, reports, signage, video credits, dedications, and other public communications regarding this Project. Contractor must obtain prior SRCD approval for the use of SRCD logo or the logo of any Funder(s) relating to this Project.

29. **Protocols for Emergencies and Unexpected Events**: Contractor agrees to meet all requirements and restrictions defined in Exhibit D.

30. **Audit**: Contractor agrees that CDFW, the Department of Finance, Department of General Services, California State Auditor's Office, or their designated representatives shall have the right to review and to copy any records and supporting documentation related to the performance of this agreement. Subcontractor agrees to maintain such records for possible audit for a minimum of three years after final payment, unless a longer period of records retention is stipulated. Subcontractor agrees to allow the auditor(s) access to such records during normal business hours and to allow interviews of any employees who might reasonably have information related to such records. Contractor agrees to put a substantially similar term in any subcontract it executes with another entity related to the performance of this agreement.

The above Contract as outlined is hereby agreed upon:

For **Contractor**

_____ _____
Authorized Signer Date

_____
Printed Name and Title of Authorized Signer

For **SONOMA RESOURCE CONSERVATION DISTRICT**

_____ _____
Christine Kuehn, Executive Director Date

Exhibit A – Scope of Work

The latest edition of the Standard Specifications of the State of California, Division of Transportation, shall govern operations and materials (but not pricing) for this project except where otherwise indicated in the specifications and on the plans. The Caltrans Standard Specifications are included as part of this contract by reference.

Exhibit B – Rate Schedule

Exhibit C – Cost Proposal

Exhibit D – Special Considerations and Protocols for Emergencies and Unexpected Events

1 ENVIRONMENTALLY SENSITIVE AREAS

This Project site is considered an environmentally sensitive area. The contractor shall take all precautions and measures necessary to protect the environmental integrity of the site including, but not limited to, the protection of all plants, animals, and aquatic life.

The following items are an integral aspect of this construction project, and are to be reviewed before construction begins:

1.1 Permits: Permits are required. Please see the permit section below for more details.

1.2 Contractor shall have emergency spill cleanup gear (spill containment and absorption materials) and fire equipment available on site at all times. These items are to be reviewed by the Project Manager before construction begins.

1.3 Access to the site must be thoroughly reviewed with the Project Manager. Exact location of access way, number of trips planned, and type of vehicles used shall be discussed. Contractor shall be responsible for repairing, at his/her own cost above and beyond the scope of work.

1.4 Trash, litter, construction debris, cigarette butts, etc., must be stored in a designated area approved by the Project Manager or removed from the site at the end of each working day. Upon completion of work, contractor is responsible for removing all of these unwanted items to the satisfaction of the Project Manager.

1.5 Abiding by Exhibit X: Best Management Practices and Mitigation Measures.

1.6 Include any other special requirements (biological surveys/monitoring/construction timeline limitations for habitat, etc)

1.7 The Contractor shall conform to Sonoma County Erosion Prevention and Sediment Control in accordance with Chapter 11 and Chapter 11A of the Sonoma County Code. Detailed Sonoma County Erosion Prevention and Sediment Control notes can be found on the attached Project Plans or at the Permit Sonoma Website[1].

[1] https://permitsonoma.org/instructionsandforms/grd-011erosionpreventionandsedimentcontrolnotes

2 PERMITS

The following required permits have been or will be obtained. Copies of permits will be provided to the Contractor. All contractors at the site must have possession of a copy of these documents and conform to their requirements at all times. No construction work may occur until all permits are available.

2.1 California Department of Fish and Wildlife Lake and Streambed Alteration Agreement - 1600

2.2 Regional Water Quality Control Board Water Quality Certification - 401

2.3 County of Sonoma – Building permit

2.4 County of Sonoma - Zoning Permit

3 INSPECTIONS

Work performed on this project shall be subject to regular inspections by SRCD. The Contractor shall not cover up any work prior to these inspections. Inspection shall occur during construction and at job completion. Contact SRCD for observation points.
Points of inspection by SRCD for construction:

- Mobilization and site prep
- Dewatering
- Excavation
- Culvert installation
- Utility installation
- Erosion prevention
- Construction completion

Points of inspection by Engineer, Adobe Associates:

- Dewatering plan
- Grading, drainage, excavation, and fill
- Foundation excavations

Points of inspection by PJC for construction:

- Grading, drainage, excavation, and fill
- Foundation excavations
- Reinforcing steel
- Concrete

4 CULTURAL RESOURCES

For projects involving ground disturbing work, paleontological resources or prehistoric, historic or tribal cultural resources are discovered during construction activities, work shall immediately be halted within the vicinity of the find. The Contractor shall call SRCD to assess the significance of the find to ensure that resources are avoided. The Northwest Information Center of the California Historical Resources Information System shall be notified at (707) 588-8455. A qualified paleontologist, archeologist, or tribal cultural resource specialist shall be consulted for an on-site evaluation. Additional mitigation may be required per the archeologist's recommendations. If potential human remains are discovered, the Contractor shall also immediately notify the Sonoma County Coroner at (707) 565-5070 and notify SRCD of the determination of the County Coroner.

5 ACTIVE FIRE OR OTHER EMERGENCY

In the event that an agency having jurisdiction has declared a Mandatory Evacuation Zone or an Evacuation Warning Zone for the area within which the project is located, all work shall immediately be halted. The Contractor may decide to demobilize equipment and materials at their own risk. If there is an active fire or other emergency within the area but the project is not within a mandatory or warning zone, the Contractor shall contact SRCD to determine whether work stoppage is necessary and appropriate. Projects will be evaluated on a case-by-case basis. Contractor shall monitor fire and weather conditions with the National Weather Service or other agency having jurisdiction to know when closures and evacuation zones are in effect. This shall be done daily, to determine the fire conditions projected for the following day and Contractor shall plan their schedule accordingly. If project work is determined to be safe to proceed during an active fire, the items listed below must be in place when there is an active fire.

5.1 Spark Arrestors: Whenever any task is being performed that may pose a potential fire danger, cell phones or 2-way radios shall be on site to permit a rapid emergency response if necessary. All motorized equipment shall have federal or state approved spark arrestors.

5.2 Trucks, Tractors: Heat from exhaust systems can ignite a wildland fire. The Contractor shall not drive off road or park near or drive through tall grasses or other flammable vegetation types without approval from the District's representative. Based upon authorization by SRCD staff, the Contractor shall remove all grasses and other types of flammable vegetation from the off-road work area approved for vehicle access.

5.3 Equipment, Tools: Heat from power equipment exhaust systems or sparks from equipment or tools can ignite a fire. Clear a space with a radius at least five feet from the exhaust in which to place equipment such as generators, chainsaws and power weed cutters. Be careful when using tools that produce sparks and be sure spark arrestors are

in good condition. Do not allow heated tools to contact ignitable fuels. If power equipment or tools that produce sparks are in use, a fire extinguisher shall be kept onsite. Larger equipment shall have a fire extinguisher mounted on it.

5.4 Fueling Equipment: Before fueling power equipment or tools in the field, clear a space in which to perform the task. Fuel should be stored in a cleared space and, where possible, in the shade. If power equipment stays in one location during the task, store fuel and equipment and perform fueling operation in the same clearing. Be sure equipment is turned off while fueling. Take extra care when fueling heated equipment. Be sure a gas spout/funnel is used to avoid spills and that gas caps are kept in place. Remove or dry any fuel spillage prior to starting equipment. During fueling operations, a fire extinguisher shall be onsite ready for use.

When practical, fuel vehicles and equipment off-site. If it is necessary to fuel on-site the following precautions shall be taken: No vehicles or equipment shall be refueled within 100 ft. (30 ft. for handheld equipment) of a watercourse, ditch, wetland, or a pond. Do not fuel equipment directly over asphalt. The fueling operator shall stay with the fueling operation at all times. Do not top off tanks. The Contractor shall have spill containment and cleanup materials available on site. Spills shall be immediately cleaned up and contaminated materials disposed in accordance with state law. Fueling operators shall have all necessary permits, licenses and training. Any spills shall be reported immediately to the crew supervisor and a SRCD representative.

5.5 Fire Suppression Equipment and Training: For every crew member, the Contractor is required to have the following fire suppression equipment on site: a shovel, a McLeod, Polaski, or other modified scraping tool. All vehicles shall have a pressurized water fire extinguisher or pump bladder bag, and ABC rated fire extinguisher. During fire season the Contractor is required to have a water buffalo, or water truck, with minimum 300-gallon capacity and 300 ft. of 1.5 in diameter hose stationed on the nearest service or paved road. The hose shall be pre-connected and preferably primed. The water truck and equipment listed above shall be within 30 ft. of at least one field crew member at all times. Wildland Fire Fighter qualification (S – 130[2]) for one or more construction crew members is recommended and will be taken into consideration when evaluating work stoppage during Red Flag Warning Days.

6 RED FLAG WARNING DAYS

A Red Flag Warning, defined by the National Weather Service, means warm temperatures, very low relative humidity, and strong winds are expected to combine to produce an increased risk of fire danger. Upon notification from the National Weather Service that a "Red Flag Warning" exists for the project area, Contractor shall contact SRCD to determine whether work stoppage

[2] https://www.nwcg.gov/publications/training-courses/s-130

is necessary and appropriate. Projects will be evaluated on a case-by-case basis. If project work is determined to be safe to proceed, the items listed under Sections 2.1 through 2.5 must be in place during all Red Flag Warning Days.

Exhibit E – IRS Form W-9